IXP400i

IMPRONET

SOFTWARE MANUAL

impro technologies®
ACCESS CONTROL

Copyright and Trademark

Copyright

This manual is propriety information of Impro Technologies (Pty) Ltd. Unauthorized reproduction of any portion of this manual is prohibited. The content of this manual is for information purposes only and is subject to change without notice. Impro Technologies assumes no responsibility for incorrect information this manual may contain.

Trademarks

Impro, ImproX, and ImproNet are registered trademarks of Impro Technologies (Pty) Ltd in South Africa and/or other countries. Other brands and products are trademarks or registered trademarks of their respective holders and should be noted as such.

At a Glance

- **Part 1** – **Hardware**—provides information to configure the ImproX Hardware before configuring the ImproNet System. It includes information on cabling, power and grounding or earthing requirements.
- **Part 2** – **Software**—provides an overview of the ImproNet System, and the basic steps for installation and pre-configuration.
- **Part 3** – **General Configuration**—General Configuration provides the nuts-and-bolts procedures for ImproNet Software configuration. The steps for the initial configuration as well as all everyday tasks are described in this section.
- **Part 4** – **Reports**—provides an overview of the Reports available in the ImproNet System, the application of these to single or multiple Sites, and the basic steps for running the Reports.
- **Part 5** – **Advanced Configuration**—details not covered in Parts 1, 2, 3 and 4, are described here. Most information in this Part is not required for everyday configuration.
- **Part 6** – **General Software Modules**—these General Software Modules form the core of the ImproNet Suite and provide control of everyday and other important functions.
- **Part 7** – **Advanced Software Modules**—Advanced Software Modules provide additional control of everyday and other important functions.
- **Part 8** – **Utilities**—the ImproNet Utilities enable you to perform administrative and maintenance tasks concerning the core ImproNet components.
- **Part 9** – **Integration Modules**—support for integration of other systems with ImproNet is covered in this Part.
- **Part 10** – **Linux Integration**—Linux integration is covered in this Part.

Contents

COPYRIGHT AND TRADEMARK 3

AT A GLANCE.....5

CONTENTS 6

INTRODUCTION 8

Document Conventions..... 8

Terminology..... 8

Supported Software and Firmware Versions 9

PART 1 – HARDWARE 11

GENERAL HARDWARE INSTALLATION GUIDELINES 13

Essential Installation Requirements..... 13

Part Number..... 13

Serial Numbers 13

Power Supply..... 14

Communication 15

Network Topology..... 16

Placement of ImproX Units 17

Grounding the Shield in an IXP400 System 18

Grounding Controllers and Terminals in an IXP400 System..... 18

Terminating the Communication Bus 20

Door Hardware Units 20

SUMMARY OF CABLE REQUIREMENTS 22

General Requirements..... 22

Low Voltage Power Supply to Controllers and Terminals 25

Digital Input Specifications..... 25

INPUT VOLTAGE REQUIREMENTS.....26

Comms Interfaces..... 26

Enrollment Readers 26
Controllers 26
Terminals 26

IMPRONET HARDWARE COMPONENTS 27

Interface Devices 27
Remote Readers 27
Controllers 27
Terminals 28
Bus Types (ImproX IC) 29
System Hardware Combinations 29
ImproX Units for use in an IXP300, IXP400 or IXP400i System 31
System Size Limits 34

INSTALLATION INFORMATION 36

Doors and Zones 36
Addressing Scheme 36
Positioning Units 38

HARDWARE MAINTENANCE 40

Maintenance Overview 40
Maintenance Tools 40
Hardware Testing 42
Specific Maintenance 42

Introduction

Document Conventions

The following conventions are used in this document:

Note—indicates additional information about a topic

Tip—indicates suggestions and alternative methods to perform tasks

Important—indicates important information

Warning—indicates potential danger to you or the product

Terminology

Impro-Specific Terminology

The following terminology appears in this document:

- **ImproNet**—the commonly used name of the **IXP300, IXP400 or IXP400i** Series Software Suite. However, the term ImproNet also describes an access solution as a whole; it encompasses all Hardware, Software and third-party applications.
- **IXP300**—the ImproNet System based around the **ImproX IC** Controller.
- **IXP400**—the ImproNet System based around the **ImproX EC** Controller.
- **IXP400i**—the ImproNet System based around the **ImproX EC^{II}** Controller.
- **ImproX Hardware**—the hardware units comprising an ImproNet System. The major ImproX components are Controllers, Terminals and Tag Readers.
- **Tag**—the passive, proximity component used as a unique identifier in an ImproNet Access Control System.

Country-specific Terminology

Different countries use different words to name or describe the same thing. **Table 1** lists the International terms and their American equivalents used (sometimes inter-changeably) in this document.

International	American	British
Lift	Elevator	Lift
Grounding	Grounding	Earthing
Ground	Ground	Earth
Tag	Card	Tag
Registration	Enrollment	Registration
Registration Reader	Enrollment Reader	Registration Reader
Screen	Shield	Screen
Screening	Shielding	Screening

Table 1 – Area-specific Terminology

In some cases, terms are used inter-changeably.

Supported Software and Firmware Versions

This release of the **ImproNet Software Installation Guide** applies to the following Impro Software and Firmware versions, as well as any later versions that do not affect the contents of this Guide. Update of this Guide takes place only when significant changes occur.

ImproNet Software Suite	**V7.66**
ImproX IC Controller	**V7.20**
ImproX EC Ethernet Advanced Controller	**V7.20**
ImproX EC^{II} Ethernet Controller	**V8.02**
ImproX RH Registration Interface	**V1.18**
ImproX DBv 125 kHz Vertical Mount Drop Box	**V7.18**
ImproX DBv 13.56 MHz Vertical Mount Drop Box	**V7.24**
ImproX ER Extended Range Terminal	**V7.16**
ImproX LR Long Range Terminal	**V7.16**
ImproX MfT Multi-function Terminal	**V7.24**
ImproX I16 Input Terminal	**V7.24**
ImproX O16 Output Terminal	**V7.24**
ImproX TA Time Attendance Terminal	**V7.26**
ImproX iTT Twin Antenna Terminal	**V4.02**
ImproX iTRT Intelligent Twin Reader Terminal	**V4.02**
ImproX MDTA Multi-discipline Time Attendance Terminal	**V1.14**
ImproX XFM Multi-mode 13.56 MHz Remote Reader	**V3.08**
ImproX TAR Time Attendance Remote Reader	**V3.06**
ImproX Multi-discipline Readers	**V2.14**
ImproX B-SHO Enrollment Terminal	**V1.04**
ImproX B-SHO Fingerprint Terminal	**V1.26**
Wiegand 125 kHz Passive Proximity Readers	**V1.08**

PART 1 – HARDWARE

General Hardware Installation Guidelines

Essential Installation Requirements

All units must be installed and wired in accordance with the good installation practices, local codes, and the requirements of authorities having jurisdiction.

Part Number

Each type of ImproX product or document has a Part Number. This Code is used when ordering products. The format of the code is as follows: (XXXNNN-N-N-XX-XX, where X indicates a letter and N a decimal digit).

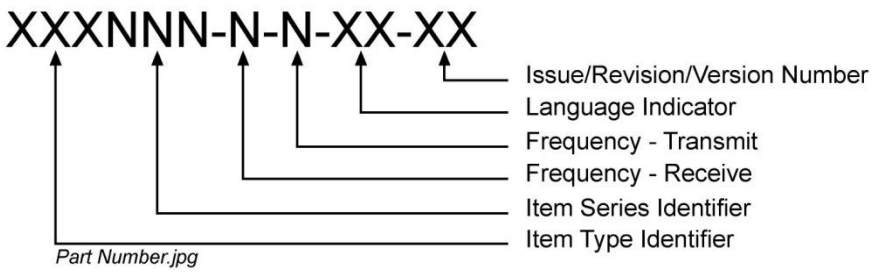

Figure 1 – Unit Identification Code Format

Typical examples of this code for hardware products are:

- *XTT900-1-0-GB-01 – ImproX Twin Antenna Terminal, frequency 125 kHz, hardware design revision 01.*
- *MDR900-5-0-GB-06 – ImproX (MDR) Multi-discipline Reader, frequency 125 kHz, 13.56 MHz and Wiegand, hardware design revision 06.*

Serial Numbers

All ImproX hardware has a unique serial number of the following format:

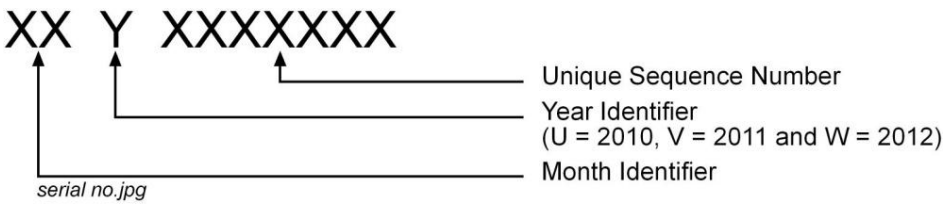

Figure 2 – Serial Number Format

*The **Year Identifier** uses letters to denote the year. Each year, the letter advances by one.*

Power Supply

Requirements

Using a Power Supply where the input voltage exceeds the value named in this Manual, will damage the unit.

- Power units using a power-limited access control or burglar alarm power supply that provides the **required voltage and current** and **a minimum 4-hour standby time**.
- Reduce the current load, by installing ONE Power Supply for each set of Readers and Terminals at a Location.
- Power each high-current Magnetic Lock using a separate Power Supply.
- ImproX Controllers and most Terminals operate from DC input voltages in the range 10 to 30 V DC.
- ImproX Remote Readers operate from an input voltage of 5 V DC.
- The maximum distance between the Power Supply and the units it supplies with power, depends on the **output voltage of the Power Supply** and the **cross-sectional area of cable**. Refer to Table 3 for more information.

Recommendations

- Protect all mains inputs to the Power Supply from high voltage surges.
- Power Supplies with battery backup are preferable as they ensure that occurrences of mains *brownouts* have no effect on the Reader or Controller performance. Battery backups should supply a minimum of 4 hours standby time.
- Batteries typically have a life expectancy of 3 to 4 years. Therefore, replace batteries at regular intervals.

ImproX Power Supplies are specifically designed to fulfil all of these requirements.

Arc Suppression

Fit arc suppression components on all doors and access points using Strike or Magnetic Locks.

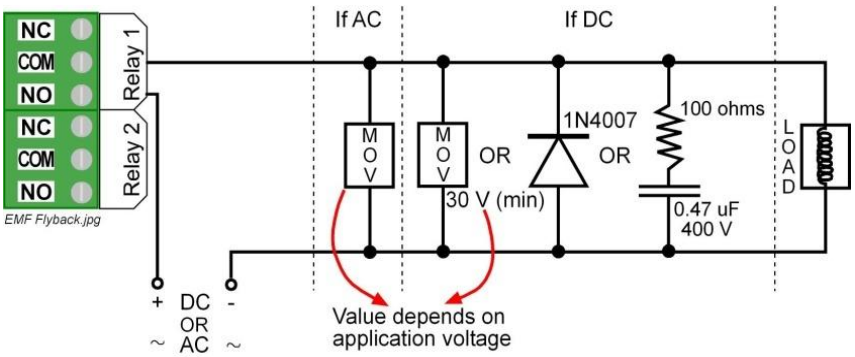

Figure 3 – Arc Suppression Circuitry

Suitable devices should be used for EMF flyback and arc suppression when driving an inductive load via the relay contacts. Figure 3 shows the technical details.

Surge Protection

In areas where lightning is common, we recommended using surge protection on low voltage power lines and RS485 Communications lines. The **Impro Line Surge Protector** is recommended for RS485 Communications Protection. The **Impro Low Voltage Line Protector** is recommended for low voltage lines.

Communication

The majority of the ImproX product range uses **RS232** and **RS485** protocols for most communication purposes. The ImproX EC and ImproX EC^{II}, however, support **Ethernet (LAN)** communication.

- **RS232**—is generally used for short distances up to **25 m** (**82.02 ft**). RS232 connects to a single hardware device via a serial communications port to a PC running the ImproNet Software.
- **RS485**—supports longer communications runs. It connects multiple hardware devices to a common bus (Multi-Dropping). The IXP300 and IXP400 Systems use RS485 for their Terminal and Controller busses.
- **Connect to the LAN**—using an Ethernet Switch or Hub (or other network device). Cable runs for LAN connections must conform to Ethernet cabling specifications.
- **USB**—is used between the ImproX RH and the PC running ImproNet Engine.

Recommended Cable

Choice of cable is a critical part of the installation process. Defective or unspecified cable can result in communication problems. This can result in hardware timeouts and an overall speed reduction of System procedures. Correct cable is particularly important for RS485 buses.

Ensure the following when selecting cable:

- For the RS485 Comms Bus, use twisted-pair Mylar shielded cable only.
- For RS485 Ports, the individual cross-sectional area of the each conductor in the cable must not be less than **0.2 mm²** (**0.0003 in²**).
- For RS485 Ports, the maximum permissible cable length is **1 000 m** (**3 281 ft**).
- For RS232 Ports, the individual core cross-sectional area of the each conductor in the cable must not be less than **0.2 mm²** (**0.0003 in²**).
- For RS232 Ports, the maximum permissible cable length is **25 m** (**82.02 ft**).
- Cables must be:
  - Neatly laid out
  - Labelled correctly on both ends with cable markers
  - Earthed correctly—connect the shield of the cable to the Earth terminal on the unit. In turn, connect the unit to a good Earth point. The earth must be a **low resistance** connection to Earth and **not** an arbitrary Earth connection.

Connect the shield at one end of the cable only.

- **Keep cable joins to a minimum**. However if necessary, connect cable joins using proper **connecting strips**.
- On shielded cables, connect the shield to ground (earth) as follows:
  - Strip to the required length exposing the internal wires
  - Untwist the excess length of metallic foil and plastic covering and remove the plastic
  - Twist the metallic foil to form a wire tail
  - Connect the shield lead to the Earth terminal. Earthing is at ONE end of the cable only.
- Cable layout of an installation must be documented, and the documents placed under configuration control.
- Daisy-chain formations are preferable to Star formations.
- Sites where transmission lines are long, or multiple star formations are used, may experience timeouts on certain ImproX Controllers or Terminals. These are caused by reflections on the RS485 lines. To solve the problem, it may be necessary to terminate the lines. Termination resistors are added at the end of a cable run only and not at every Terminal. Refer to the section **Terminating the Communication Bus** on page 20 for details.

Termination resistors are built into most ImproX Terminals.

Network Topology

Run in a **daisy chain configuration** to provide effective RS485 communication for ImproX hardware. Figure 4 illustrates a daisy chain configuration.

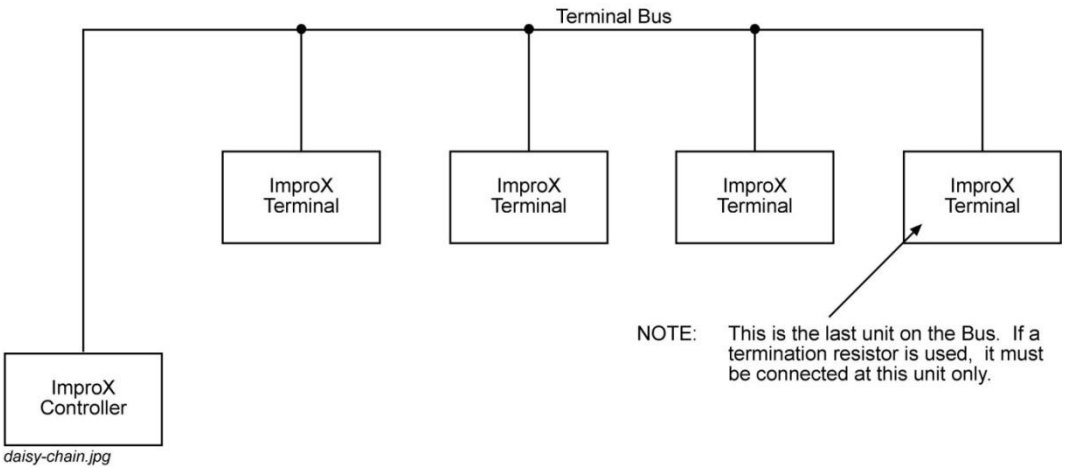

Figure 4 – Daisy-Chain Bus Connection (Good Wiring Practice)

Star configurations are not recommended, as they are susceptible to signal reflections and can result in signal degradation. End-of-line termination is also a problem with Star configurations, due to the number of end points. If a termination resistor is required at each endpoint, it will overload the RS485 driver.

More than four resistors on four of the star bus connections will overload the driver due to low parallel resistance.

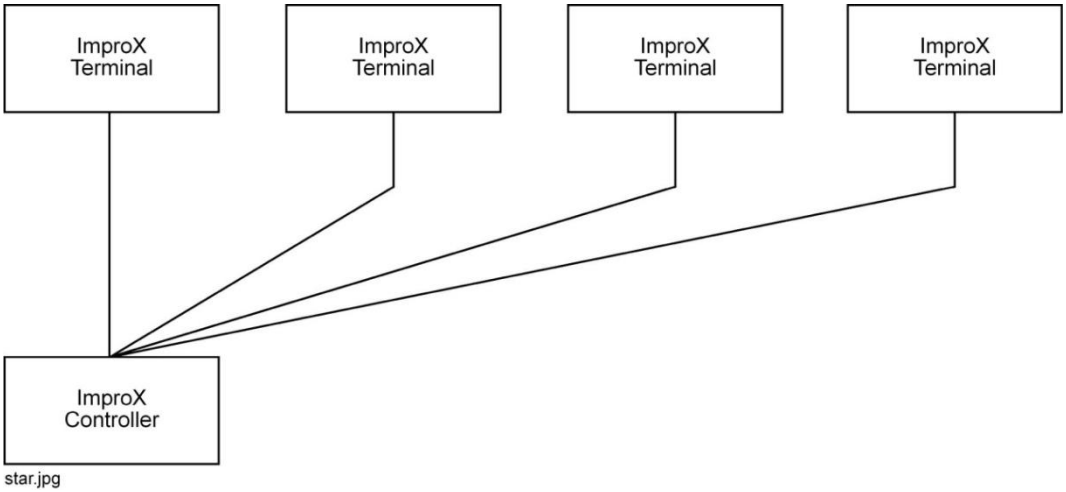

Figure 5 – Star Bus Connection (BAD Wiring Practice)

Placement of ImproX Units

Minimum Distance between ImproX Units

To avoid mutual interference, keep a **minimum** distance of **500 mm** (**19.69 in**) between adjacent ImproX Terminals or Remote Readers.

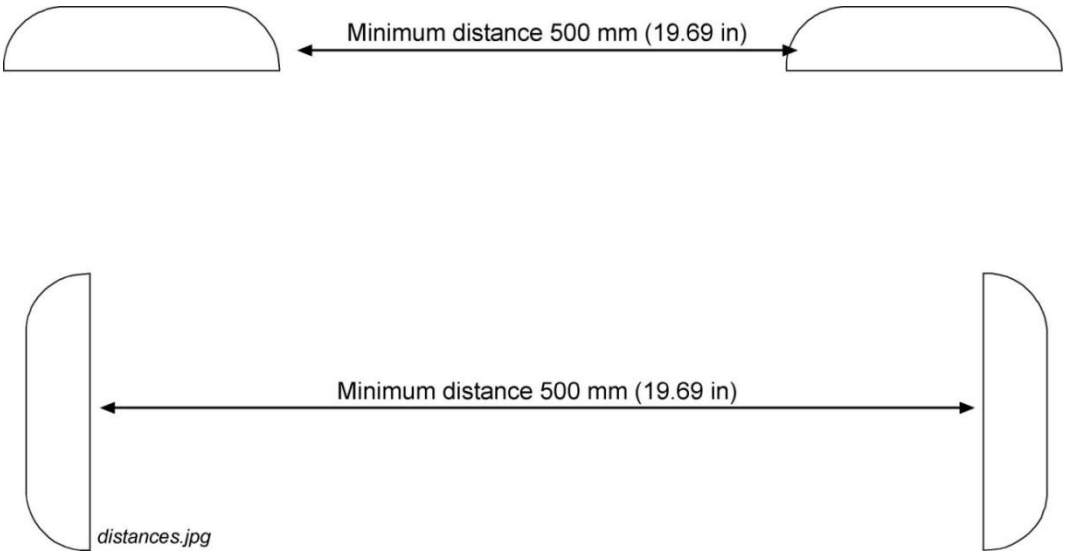

Figure 6 – Minimum Distance between Terminals or Remote Readers

Shielding of Units

In some situations, it is not possible to space the Readers the minimum distance apart.
For example, if you mount two Readers back-to-back on either side of a drywall. In this case, place an aluminium plate (at least **400 mm** X **400 mm** (**15.75 in** x **15.75 in**), with a thickness of at least **1 mm** (**0.04 in**)) between the two Readers.

Line Termination—Principles of a Terminating Resistor

Long RS485 cable runs can cause problems with impedance matching and result in degraded signals. The impedance between two units can mismatch when an increase in number of units changes the resistance and capacitance of the connection. Such an impedance-mismatched network creates reflections on signals and data sent on the cable. Reflected signals introduce noise and errors on the connecting line.

Each connected unit adds a small amount of capacitance to the network. The longer the cable run, the more inductance and resistance is added. If this occurs, units on the cable-run can timeout due to the reflections from the end of the cable conflicting with the messages sent from the Terminals.

To overcome this problem, match the impedance by placing a terminating resistor between the A and B line, at the last unit on the run. The terminating resistor inhibits the reflection and enhances the signal or data integrity.

Ensure you adhere to the following criteria when placing terminating resistors:

- Place **one** terminating resistor on a single cable run only. If more are placed, they could lower the resistance too much. As a result, the bus may *hang-up.*
- Place a terminating resistor on the cable run only if the cable has been checked for faults but timeouts are still occurring.

You should use terminating resistors only if the system is experiencing communication problems, or if the combined RS485 communications run is greater than 100 m (328 ft).

Grounding the Shield in an IXP400 System

A shield's purpose is to *drain off* electrical noise. A correctly grounded shield leads electrical noise along a path to the ground. Using a **mains ground** is possible, but it must be established *before* hardware installation to determine if it is a suitable option.

To prevent ground loops, a shield must never be grounded at both ends of an RS485 cable run. We recommend that you join - but not ground - the shield for the Controller bus and Terminal bus at each termination point, and ground the shield at one end of the bus only. A suitable grounding position is at the beginning or the end of the bus.

Grounding Controllers and Terminals in an IXP400 System

Common Ground

Connecting to a mains ground is acceptable provided it is a common (local) ground. Often, in a single building or structure, each mains ground point is connected to a common ground. However, you must confirm the grounding scenario *before* proceeding with a common ground.

The common ground method is preferred because it conforms to EMC standards. It also provides good electrostatic discharge protection and emission reduction.

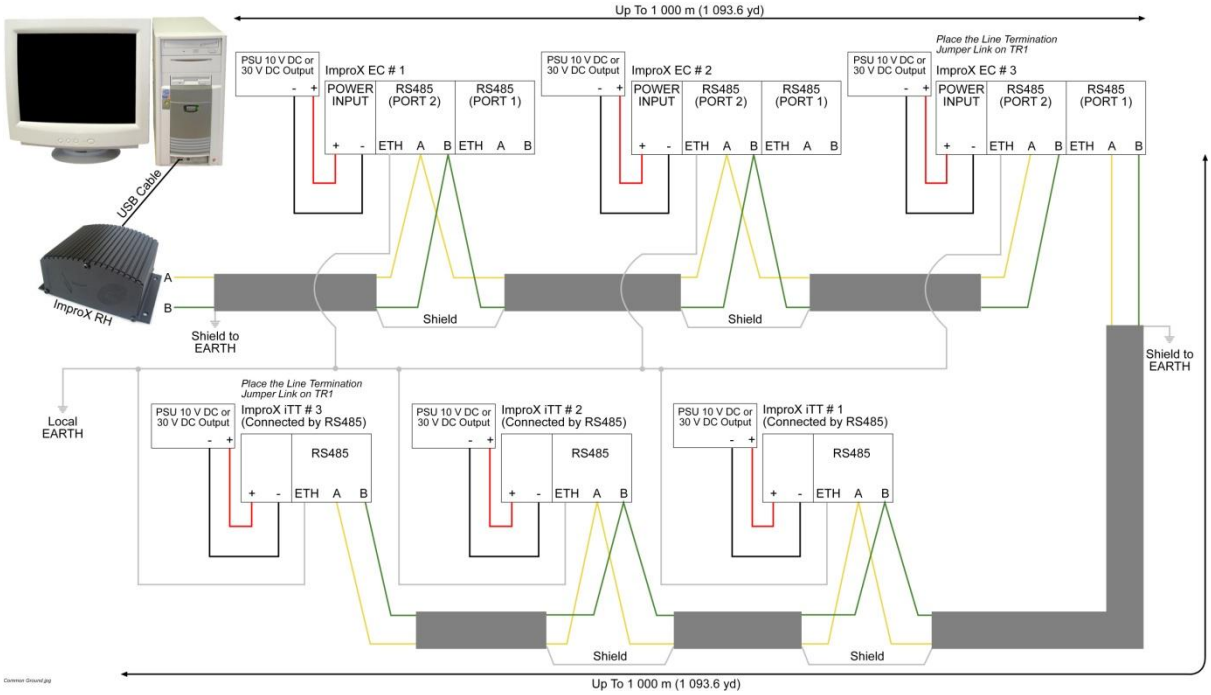

Figure 7 – The Recommended Grounding Procedure When a Common Ground Point is Available

Separate Ground Points

Often the case when the communications bus spans across buildings or structures that don't share a common (local) ground. Communication problems can occur if the hardware is grounded to separate (isolated) ground points and a potential difference exists between these points. Therefore, we recommend you do not ground Controllers and Terminals via separate ground points. In this configuration, Controllers and Terminals are floating; therefore, they are susceptible to electrostatic discharge. This method requires true floating power supplies.

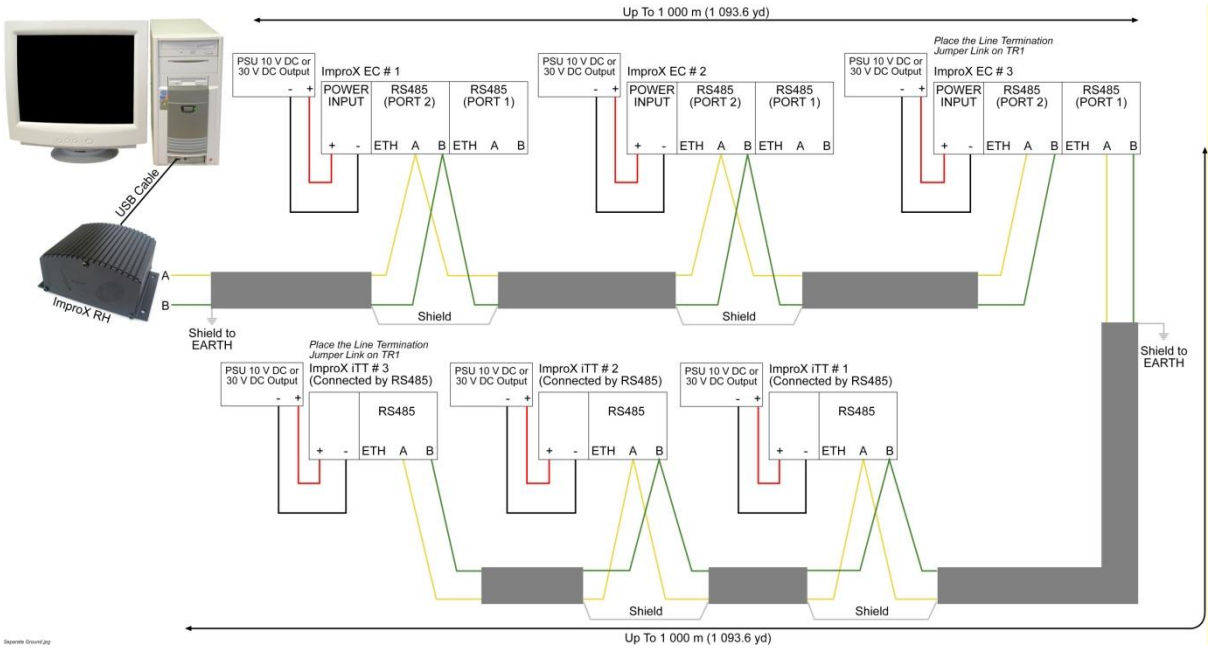

Figure 8 – The Recommended Grounding Procedure When a Common Ground Reference is *Not* Available.

Terminating the Communication Bus

The communications bus requires termination to prevent reflections on the line. ImproX Controllers and Terminals have onboard resistors that are used for line termination. Ensure the following when terminating the Communication Bus:

RS485 Host Bus (Port 2)

- Terminate the Controller communications bus (port 2) at the last Controller on the bus if the combined RS485 communications run is more than 100 m (328 ft).
- The ImproX IC (IXP300) Controller has an onboard termination resistor that is disabled by default. To terminate the communications bus at a particular Controller, short the **TR1** jumper.

Terminal Bus (Port 1)

- Terminate the Terminal communications bus (port 1) at the last Terminal on the bus if the combined RS485 communications run is more than 100 m (328 ft).
- To terminate the communications bus at a particular ImproX iTT Terminal, short the onboard jumper.
- To terminate the beginning of the Terminal communications bus at the Controller, short the **TR2** jumper on the Controller.
- The ImproX iTT, ImproX I16, ImproX O16, and ImproX ER Terminals have a single, onboard, termination resistor (all onboard termination resistors on Controllers and Terminals are **150 ohms**). To enable line termination on a particular Terminal, connect the onboard line termination link.

Door Hardware Units

Door Strike

The Door Strike is a mechanical type lock but with an electromechanical action enabling activation by the presence or absence of a current flowing through an internal solenoid. Figure 9 and Figure 10 show a typical *Door Strike* Lock. A Door Strike uses a small electro-mechanical solenoid to release the *lip* (the metal latch keeping the door closed) thus opening the door.

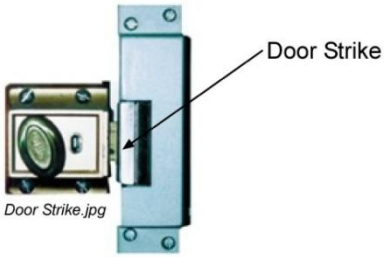

Figure 9 – Door Strike

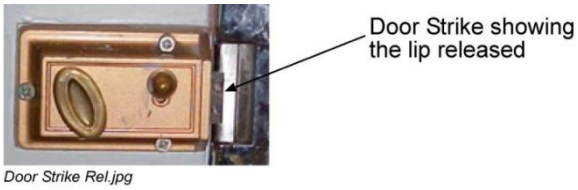

Figure 10 – Door Strike Showing Lip Released

Door Strikes have the advantage of being able to be opened with a key if necessary.

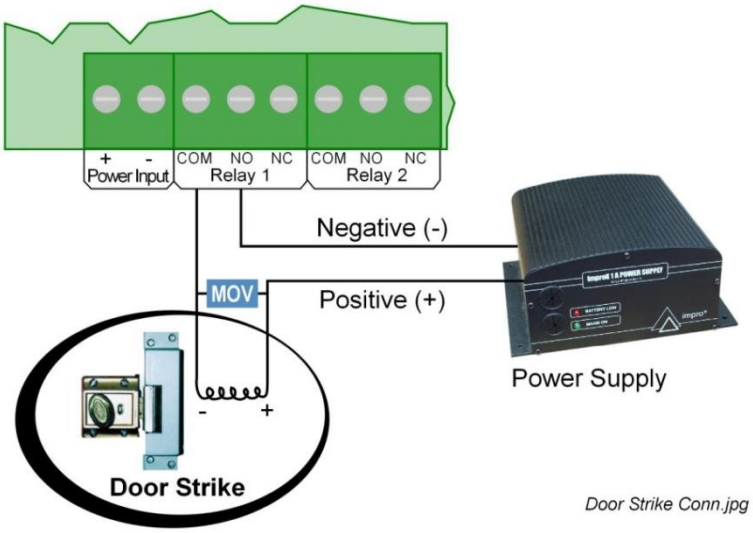

Figure 11 – Typical Wiring to a Door Strike

Magnetic Locks

A Magnetic Lock uses an electro-magnet to stay closed. When the metal plate attached to the back of the door makes contact with the Magnetic Lock, a current in the lock activates. The current induces a magnetic field in the electro-magnet, holding the door closed. If power to the Lock fails, or is switched off, the door opens easily. This is an advantage in an emergency.

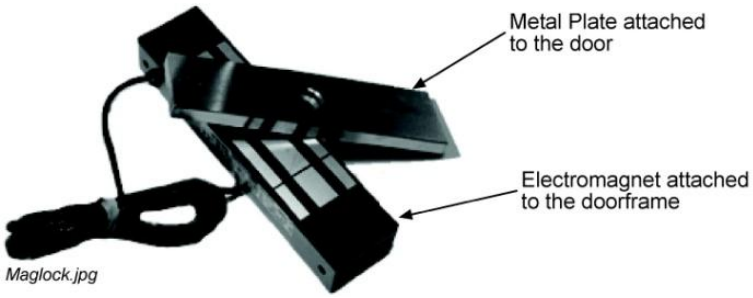

Figure 12 – Magnetic Lock

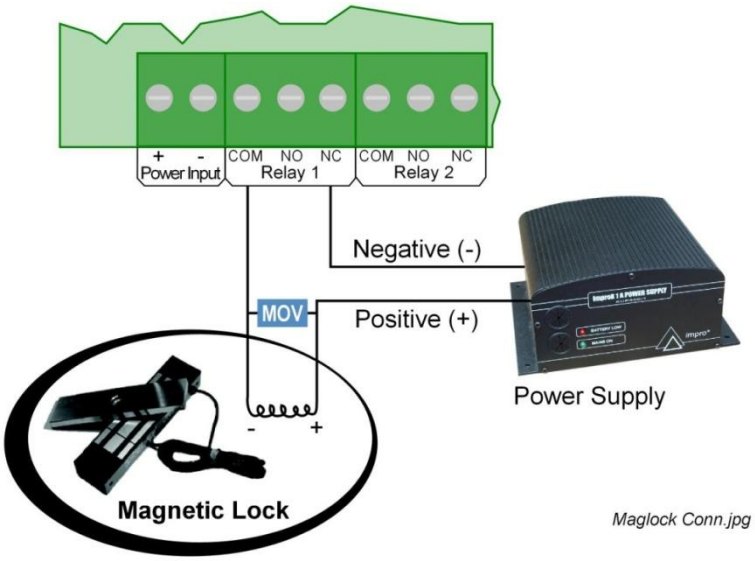

Figure 13 – Typical Wiring to a Magnetic Lock

Summary of Cable Requirements

General Requirements

Table 2 on page below provides a summary of cable requirements and related information for ImproX units. The following notes refer to the content of Table 2.

Do not attempt to extend the USB cable supplied with the ImproX RH. Rather, obtain a new 5 m (16.4 ft) cable.

We recommend that you run a 2-pair or 3-pair cable with at least a one-pair spare. Although only a single-pair cable is required for Host Bus (Port 2) communication, it is advisable to run 2 or 3 pair cable and have at least one pair spare.

We recommend cable specifications similar to the following:

- *Conductor Resistance: < 2 ohms*
- *Capacitance, Core to Earth: > 160 pF/m*
- *Capacitance Core to Core: < 100 pF/m*

A Standard USB cable is 1.8 m (5.9 ft) long and has one Type A and one Type B Connector.

The metric conversions used in Table 2 are as follows:

- *1 m = 3.28 ft*
- *2 m = 6.56 ft*
- *3 m = 9.80 ft*
- *5 m = 16.40 ft*
- *10 m = 33 ft*
- *16 m = 52.5 ft*
- *20 m = 65.60 ft*
- *25 m = 82 ft*
- *1 000 m = 1 093.60 yd*
- *0.2 mm^2 = 0.0003 in^2*

Unit	Communication Protocol	Cable			Shield Grounding
		Specification	Supplied	Maximum Length	
HI	RS232 from HI to PC	4 to 6 core shielded cable, individual conductor. Cross-sectional area must not be less than 0.2 mm^2	6 core shielded cable with DB9 serial connector	25 m from HI to PC	Not Required
ProxMate	RS232 from ProxMate to PC or HI	8 core cable, with RJ45 and DB9 connectors	1 m flat 8 core cable with 2 RJ45 connectors 1 m flat 8 core cable with 1 RJ45 connector and 1 DB9 serial connector	20 m from ProxMate to PC. This measure includes the Interface box	Not Required
RH	USB from RH to PC	Standard USB	Standard USB	5 m from RH to PC *See Note 1*	N/A

Unit	Communication Protocol	Cable			Shield Grounding
		Specification	Supplied	Maximum Length	
RS	USB from RS to PC	Standard USB	Standard USB	5 m from RS to PC *See Note 1*	N/A
RRA	N/A	6 core stranded cable	2 m 6 core cable	2 m from RRA to RH or RS unit	N/A
RRM	N/A	6 core stranded cable	2 m 6 core cable	2 m from RRM to RH or RS unit	N/A
MDE	N/A	6 core stranded cable	2 m 6 core cable	2 m	N/A
IC	Port 1 - RS485 Port 2 - RS485	Twisted pair (multi-stranded) shielded, with mylar sheath. Cross-sectional area must not be less than 0.2 mm^2. (Single pair required for Port 2) *See Note 2*	None	Port 2 from HI or RH to last Controller on the bus must not exceed 1 000 m	Ensure that the shield is grounded at only one end of each run between Controllers
EC	Port 1 - RS485 Port 2 - RS485	Twisted pair (multi-stranded) shielded, with mylar sheath. Cross-sectional area must not be less than 0.2 mm^2. (Single pair required for Port 2) *See Note 2* If the host communication is network based, then use standard Cat 5 (or higher) network cable with standard RJ45 connectors	None	Port 1 from Controller to last Terminal on the bus must not exceed 1 000 m	Ensure that the shield is grounded at only one end of each run between Terminals
EC^{II}	Port 1 - RS485 Port 2 - RS485	Twisted pair (multi-stranded) shielded, with mylar sheath. Cross-sectional area must not be less than 0.2 mm^2. (Single pair required for Port 2) *See Note 2* If the host communication is network based, then use standard Cat 5 (or higher) network cable with standard RJ45 connectors	None	Port 1 from RH to last Controller on the bus must not exceed 1 000 m	Ensure that the shield is grounded at only one end of each run between Controllers
MDTA	RS485	Twisted pair (multi-stranded) shielded, with mylar sheath. Cross-sectional area must not be less than 0.2 mm^2. (Single pair required for Port 1)	None	From Controller to last Terminal on the bus must not exceed 1 000 m	Ensure that the shield is grounded at only one end of each run between Terminals
iTT	Port 1 – RS485	Twisted pair (multi-stranded) shielded, with mylar sheath. Cross-sectional area must not be less than 0.2 mm^2. (Single pair required for Port 1) For network based communications, use standard Cat 5 (or higher) network cable with standard RJ45 connectors	None	Port 1 From Controller to last Terminal (iTT) on the bus must not exceed 1 000 m	Ensure that the shield is grounded at only one end of each run between Terminals

Unit	Communication Protocol	Cable			Shield Grounding
		Specification	Supplied	Maximum Length	
iTRT	Port 1 – RS485	Twisted pair (multi-stranded) shielded, with mylar sheath. Cross-sectional area must not be less than 0.2 mm^2. (Single pair required for Port 1) For network based communications, use standard Cat 5 (or higher) network cable with standard RJ45 connectors	None	Port 1 From Controller to last Terminal (iTRT) on the bus must not exceed 1 000 m	Ensure that the shield is grounded at only one end of each run between Terminals
MfT	Port 1 (Cont) – RS485	Twisted pair (multi-stranded) shielded, with mylar sheath. Cross-sectional area must not be less than 0.2 mm^2. (Single pair required for Port 1)	None	Port 1 From Controller to last Terminal (MfT) on the bus must not exceed 1 000 m	Ensure that the shield is grounded at only one end of each run between Terminals
ER	Port 1 – RS485	Twisted pair (multi-stranded) shielded, with mylar sheath. Cross-sectional area must not be less than 0.2 mm^2. (Single pair required for Port 1)	None	Port 1 From Controller to last Terminal (ER) on the bus must not exceed 1 000 m	Ensure that the shield is grounded at only one end of each run between Terminals
LR	Port 1 – RS485	Twisted pair (multi-stranded) shielded, with mylar sheath. Cross-sectional area must not be less than 0.2 mm^2. (Single pair required for Port 1)	None	Port 1 From Controller to last Terminal (LR) on the bus must not exceed 1 000 m	Ensure that the shield is grounded at only one end of each run between Terminals
O16	Port 1 – RS485	Twisted pair (multi-stranded) shielded, with mylar sheath. Cross-sectional area must not be less than 0.2 mm^2. (Single pair required for Port 1)	None	From Controller to last Terminal (O16) on the bus must not exceed 1 000 m	Ensure that the shield is grounded at only one end of each run between Terminals
I16	Port 1 – RS485	Twisted pair (multi-stranded) shielded, with mylar sheath. Cross-sectional area must not be less than 0.2 mm^2. (Single pair required for Port 1)	None	From Controller to last Terminal (I16) on the bus must not exceed 1 000 m	Ensure that the shield is grounded at only one end of each run between Terminals
ER or LR Antenna	Antennas use non-standard protocols	RG58 Multi-strand 50 ohm coaxial cable	5 m of black coaxial multi-strand cable with 2 pin connector	5 m from ImproX Terminal to Antenna	Not Required
Antenna Readers (connect to iTT) MA, KA MHA, MMA, KHA, KMA, RA, CA, DPA	Antenna Readers use non-standard protocols	Shielded, multi-strand, 3-pair twisted cable. Cross-sectional cable area must be at least 0.2 mm^2 *See Note 3*	None	16 m from Terminal	Not Required
Remote Readers (connect to iTRT, MfT, TA, iTA) MDR, MDK,	Multi-mode Remote Readers use non-standard protocols	Shielded, multi-strand, 2-pair twisted cable. Cross-sectional cable area must be at least 0.2 mm^2 *See Note 3*	None	10 m from Terminal	Not Required
Wiegand Readers (connect to iTRT, MfT, TA, iTA, RS, RH)	Wiegand Readers use non-standard protocols	Shielded, multi-strand, 2-pair twisted cable. Cross-sectional cable area must be at least 0.2 mm^2 *See Note 3*	None	150 m from Terminal when connected to a 12 V Power Supply Unit	Not Required

Table 2 – Cable Requirements Matrix

Low Voltage Power Supply to Controllers and Terminals

Typical cable lengths are provided in Table 3.

PSU Output Voltage	Maximum Distance from PSU to Device	Cable Specification
10 V DC	10 m (32.81 ft)	Conductors with a minimum cross-sectional area of 0.5 mm^2 (0.0008 in^2)
30 V DC	20 m (65.62 ft)	Conductors with a minimum cross-sectional area of 0.5 mm^2 (0.0008 in^2)

Table 3 – Low Voltage Power Supply cable Requirements

Digital Input Specifications

Terminal	Recommended Cable	Detection Resistance Range
ImproX iTT	Single Pair	< 5 kOhm
ImproX iTRT	Single Pair	< 5 kOhm
ImproX MfT	Single Pair	< 5 kOhm
ImproX I16	Single Pair	< 5.6 kOhm

Table 4 – Digital Input Specifications

Input Voltage Requirements

Power all units using a power limited, access control or burglar alarm power supply. The power supply must provide the required voltage and current as stated, and provide a minimum 4-hour standby time.

Comms Interfaces

These units can be used to interface between the Host PC and its Controllers.

Comms Interfaces	Input Voltage
ImproX RH and HI (For use with PC RS232 Comms Ports)	10 V DC - 30 V DC

Table 5 – Comms Interfaces - Input Voltage

Enrollment Readers

Enrollment Readers	Input Voltage
ProxMate, Utility ProxMate, ImproX RS and ImproX MDE	5 V DC

Table 6 – Enrollment Readers - Input Voltage

The ProxMate and Utility ProxMate operate at 5 V DC. However, they require a 6 V DC power supply, as the power supply connects to the 5 V DC, PC-interface junction-box connected to the ProxMate or ProxPal.

The ImproX RS and ImproX MDE operate at 5 V DC, supplied by the PCs USB Port.

Controllers

Controllers	Input Voltage
ImproX IC, EC and EC^{II}	10 V DC - 30 V DC

Table 7 – Controllers - Input Voltage

Terminals

Terminals	Input Voltage
ImproX iTRT, iTT, TA, MfT, O16 and I16	10 V DC - 30 V DC
ImproX MDTA	8 V DC – 14 V DC
ImproX ER	10 V DC - 16 V DC
ImproX LR	12 V DC

Table 8 – Terminals - Input Voltage

ImproNet Hardware Components

Interface Devices

ImproNet supports the following types of interface devices connected to a Comms Server (Host PC):

- **ImproX HI**
- **ImproX RH**
- **ImproX RS**

*The **ImproX HI** acts as an RS485 to RS232 converter. The **ImproX RH** acts as an RS485 to USB converter. Either device can connect to a Comms Server (Host PC).*

*The **ImproX RS** has protocol conversion functionality. However, this functionality is not used in an ImproNet System. Therefore, in an ImproNet System, the **ImproX RS** is used only to interface third-party Tag enrollment hardware.*

*When used in a network implementation, the **ImproX EC^{II} Controller** does not need the Interface Devices (mentioned above) for communication purposes. The Interface Devices are only required for authentication of the ImproNet Software.*

Remote Readers

Remote readers attach to **ImproX iTRT**, **ImproX TA** and **ImproX MfT** Terminals, providing them with proximity Tag-reading functionality.

Controllers

ImproNet supports the following Controller types:

- **ImproX IC** (IXP300)
- **ImproX EC** (IXP400 Ethernet Controller)
- **ImproX EC^{II}** (IXP400i Ethernet Controller)

The main functional difference between the Controllers is memory size. The EC and EC^{II} Controllers have more memory than the IC Controller. Therefore, the EC and EC^{II} Controllers support more Tagholders and buffer more transactions. They also support more Tagholder Access Groups than the IC Controller. For details on differences between the Controllers, refer to Table 12 on page 35.

If a combination of ImproX IC, ImproX EC and ImproX EC^{II} Controllers are used in the same System the limitations of the ImproX IC Controller apply. The only exception is the number of transactions that each Controller can buffer.

Controller Operation and Functionality

Controllers perform many functions in an ImproNet System. However, the main functions are as follows:

- **Terminal Polling**—Controllers poll Terminals for Transactions. A Transaction is generated when a Tag or Card is read by a Terminal.
- **Making System Related Decisions**—when a Controller receives a Transaction, the Controller decides whether to **allow** or **deny** access based on pre-defined information stored in its memory.
  When a transaction is processed, the Controller instructs the Terminal to execute Actions associated with the *allowed* or *denied* access **Event**. The decision to grant a Tagholder access is made by the Controller only; the Terminal only passes Transaction data to the Controller. If Controller communication with Terminals is disrupted, Terminals are disabled until communication is re-established.
- **Off-line Transaction Buffering**—if the Controller is off-line (disconnected from the Host PC or Engine Software), the Controller buffers Transactions received from its Terminals. When the Controller is back on-line, it is polled by the Engine and the stored transactions are downloaded to the Engine PC.

Terminals

There are four groups of ImproX Terminals in the ImproNet System; each has a different purpose. The Terminal groups are as follows:

- **Tag Reading Terminals**—provide a Tag reading function.
- **Non Tag-Reading Interface Terminals**—provide Tag reading functions via attached Remote Readers, Antenna Readers, or other devices such as Biometric Readers and so on.
- **Non Tag-Reading Terminals**—perform functions other than reading Tags. For example, Building Management and or Lift (Elevator) Control.
- **Biometric Terminals**—provide a fingerprint reading function.

Tag Reading Terminals

These are access readers for Locations (Doors and/or Lifts (Elevators)) and include Reader Terminals (such as the **ImproX TA**), and Remote Readers (such as the **ImproX MDR**).

Non Tag-Reading Interface Terminals

These include Terminals such as the **ImproX iTT**, **ImproX MfT** and **ImproX iTRT**.

Non Tag-Reading Terminals

Used for Building Management and Lift (Elevator) Control, and include the **ImproX I16** and **ImproX O16**.

Biometric Terminals

These are access readers for Locations (Doors) and include Terminals such as the **ImproX B-SHO Fingerprint Terminal**.

During the Software Configuration Process, you must assign Terminals to a Door, a Lift (Elevator), or a Building Management function in accordance with installation wiring.

Bus Types (ImproX IC)

In an IXP400 System, there are two data bus types, that is the **Host Bus** and **Terminal Bus**.

Host Bus (Controller Port 2)

The connection from the **ImproX HI** or **ImproX RH** to the **ImproX IC** Controller is known as the Host Bus.

*Connect the PC communications port via an **RS232** to **RS485** converter (**ImproX HI**) in to the ImproX EC Terminal Port 2 RS485 terminal block. Alternatively, use the ImproX RH instead of the ImproX HI—the ImproX RH functions as a USB to RS485 converter.*

The ImproX EC and ImproX EC^{II} in effect use the LAN cabling as a communications bus.

Terminal Bus (Controller Port 1)

The connection from the **ImproX IC Controller** to the other ImproX Terminals is known as the **Terminal Bus** and uses the **RS485** bus protocol.

System Hardware Combinations

IXP300

The **IXP300** System includes the following hardware:

- Up to16 **ImproX IC** Controllers.
- Each IC Controller supports up to 16 Locations, with a maximum of three Fixed Addresses per location. The most commonly used Terminals for door access are the **ImproX TA**, **ImproX iTT, ImproX iTRT** and **ImproX MfT**.
  - ImproX TA – 2 Fixed Addresses (if a Remote is connected)
  - ImproX iTT – 2 Fixed Addresses
  - ImproX iTRT – 2 Fixed Addresses
  - ImproX MfT – 3 Fixed Addresses
- Optional Terminals that may be used for Building Management functions, are the **ImproX O16** and **ImproX I16**.

- A maximum of five O16 Terminals may be coupled per Lift (Elevator) for Lift (Elevator) Control (if Lift (Elevator) Control is implemented), with one ImproX Reader per Lift (Elevator).

IXP400

The **IXP400** System includes the following hardware:

- Up to 64 **ImproX EC** Controllers.
- Each EC Controller supports up to 64 Terminal Fixed Addresses. The most commonly used Terminals for door access are the **ImproX TA**, **ImproX iTT, ImproX iTRT** and **ImproX MfT**.
  - ImproX TA – 2 Fixed Addresses (if a Remote is connected)
  - ImproX iTT – 2 Fixed Addresses
  - ImproX iTRT – 2 Fixed Addresses
  - ImproX MfT – 3 Fixed Addresses
- Optional Terminals that may be used for Building Management functions are the **ImproX O16** and **ImproX I16**.
- A maximum of five O16 Terminals may be coupled per Lift (Elevator) for Lift (Elevator) Control (if Lift (Elevator) Control is implemented), with one ImproX Reader per Lift (Elevator).

If a single Terminal (with a single Fixed Address) only, is allocated to a Location, it is possible for the Controller to support 64 Locations.

IXP400i

The **IXP400i** System includes the following hardware:

- Up to 64 **ImproX EC^{II}** Controllers.
- Each EC^{II} Controller supports up to 64 Terminal Fixed Addresses. The most commonly used Terminals for door access are the **ImproX TA**, **ImproX iTT, ImproX iTRT** and **ImproX MfT**.
  - ImproX TA – 2 Fixed Addresses (if a Remote is connected)
  - ImproX iTT – 2 Fixed Addresses
  - ImproX iTRT – 2 Fixed Addresses
  - ImproX MfT – 3 Fixed Addresses
- Optional Terminals that may be used for Building Management functions are the **ImproX O16** and **ImproX I16**.
- A maximum of five O16 Terminals may be coupled per Lift (Elevator) for Lift (Elevator) Control (if Lift (Elevator) Control is implemented), with one ImproX Reader per Lift (Elevator).

If a single Terminal (with a single Fixed Address) only, is allocated to a Location, it is possible for the Controller to support 64 Locations.

ImproX Units for use in an IXP300, IXP400 or IXP400i System

Interface Devices

Unit	Description	Part Number
ImproX HI	Host Interface	XHI900-0-0-GB-XX
ImproX RH	Registration Interface	XRH900-1-0-GB-XX
ProxMate	Tag Reader with RS232 connection	XPM901-1-0-GB-XX
ImproX RS	Registration Interface	XRS902-1-0-GB-XX
ImproX RRA	Antenna Reader for the ImproX RH and RS	XPR901-1-0-GB-XX
ImproX RRM	Enrollment Reader for the ImproX RH and RS	XRM901-4-0-GB-XX
ImproX MDE	Multi-discipline Enrollment Reader	MDE900-5-0-GB-XX
ImproX B-SHO	ImproX B-SHO Enrollment Reader	IBT900-4-0-GB-XX IBT902-0-0-GB-XX

Only use the B-SHO Fingerprint Enrollment Reader in conjunction with the ImproX EC^{II} Controller.

*The **ImproX RS** has protocol-conversion functionality. However, this functionality is not used in an ImproNet System. Therefore, the **ImproX RS** is used only to interface third-party Tag Enrollment hardware.*

Controllers

Unit	Description	Part Number
ImproX IC	Controller in the ImproNet System (IXP300). This standard Controller supports connection of up to 48 Terminal Fixed Addresses	XIC900-1-0-GB-XX
ImproX EC	Ethernet Advanced Controller in the ImproNet System (IXP400). The Ethernet Advanced Controller supports connection of up to 64 Terminal Fixed Addresses	XAC906-1-0-GB-XX
ImproX EC^{II}	Ethernet Controller in the ImproNet System (IXP400i). The Ethernet Controller supports connection of up to 64 Terminal Fixed Addresses	XEC900-0-0-GB-XX

Terminals

Unit	Description	Part Number
ImproX ER	Extended Range Terminal	XER901-3-0-GB-XX
ImproX LR	Long Range Terminal	XLR900-1-0-GB-XX
ImproX MfT	Multi-function Terminal	XEA931-1-0-GB-XX IPS930-1-0-GB-XX
ImproX I16	Input Terminal providing 16 digital inputs	XIT900-0-0-GB-XX
ImproX O16	Output Terminal providing 16 relay outputs	XOT900-0-0-GB-XX
ImproX TA	Time Attendance Terminal	XTA902-1-0-GB-XX
ImproX iTRT	Intelligent Twin Reader Terminal	XRT910-0-0-GB-XX XRT920-0-0-GB-XX IPS920-0-0-GB-XX IPS921-0-0-GB-XX

Unit	Description	Part Number
ImproX iTT	Intelligent Twin Antenna Terminal	XTT910-1-0-GB-XX XTT920-1-0-GB-XX IPS910-1-0-GB-XX IPS911-1-0-GB-XX
ImproX MDTA	Multi-discipline Time Attendance Terminal	XTA920-5-0-GB-XX XTA921-5-0-GB-XX
ImproX DBv	125 kHz Vertical Mount Drop Box	XDB902-1-0-GB-XX XDB903-1-0-GB-XX
ImproX DBv	13.56 MHz Vertical Mount Drop Box	XDB904-4-0-GB-XX XDB905-4-0-GB-XX
ImproX B-SHO	ImproX B-SHO Fingerprint Terminal	IBT910-4-0-GB-XX
ImproX B-SHO	ImproX B-SHO Keypad Fingerprint Terminal	IBT920-4-0-GB-XX

Only use B-SHO Fingerprint Terminals in conjunction with the ImproX EC^{II} Controller.

Antenna Readers

These Readers are also used with other compatible units – see the section entitled Remote Reader and Antenna Reader Compatibility.

Unit	Description	Part Number
ImproX MMA	Mullion Antenna Reader	XTT901-1-0-GB-XX
ImproX MA	Micro Antenna Reader	XTT902-1-0-GB-XX
ImproX MHA	Metal Antenna Reader	XTT903-1-0-GB-XX
ImproX KHA	Metal Keypad Antenna Reader	XTT904-1-0-GB-XX
ImproX KMA	Mullion Keypad Antenna Reader	XTT905-1-0-GB-XX
ImproX RA	Rod Antenna Reader	XTT906-1-0-GB-XX
ImproX KA	Keypad Antenna Reader	XTT907-1-0-GB-XX
ImproX DPA	Door Entry Panel Antenna Reader	XTT908-1-0-GB-XX
ImproX CA	Conduit Antenna Reader	XTT909-1-0-GB-XX
ImproX AMR	Antenna Metal Reader	XTT951-1-0-GB-XX
ImproX AMK	Antenna Metal Keypad Reader	XTT952-1-0-GB-XX

Remote Readers

These Readers are used with the ImproX iTRT, MfT and TA as well as other compatible units – see the section entitled Remote Reader and Antenna Reader Compatibility.

Unit	Description	Part Number
ImproX MDR	Multi-discipline Reader	MDR900-5-0-GB-XX
ImproX MDK	Multi-discipline Keypad Reader	MDK900-5-0-GB-XX
ImproX XFMp	Multi-mode 13.56 MHz Remote Reader – plastic, no keypad	XRT901-4-0-GB-XX
ImproX XFMpk	Multi-mode 13.56 MHz Remote Reader – plastic, keypad	XRT902-4-0-GB-XX
ImproX XFMm	Multi-mode 13.56 MHz Remote Reader – metal, no keypad	XRT903-4-0-GB-XX

Unit	Description	Part Number
ImproX XFMmk	Multi-mode 13.56 MHz Remote Reader – metal, keypad	XRT904-4-0-GB-XX

Wiegand Readers

These Readers are used with the ImproX iTRT, MfT, TA, iTA, RS and RH.

Unit Description	Part Number
Wiegand Plastic Non-keypad 125 kHz Passive Proximity Reader	WPR900-1-0-GB-XX
Wiegand Plastic Keypad 125 kHz Passive Proximity Reader	WPK900-1-0-GB-XX
Wiegand Metal Non-keypad 125 kHz Passive Proximity Reader	WMR900-1-0-GB-XX
Wiegand Metal Keypad 125 kHz Passive Proximity Reader	WMK900-1-0-GB-XX

Receivers

Receivers are treated as Remote Readers by the System.

Unit	Description	Part Number
ImproX IR	Infrared Receiver	ITR900-0-0-GB-XX ITR901-0-0-GB-XX
ImproX RF	4-Channel UHF Receiver	UHR903-0-1-GB-XX

Other

Unit	Description	Part Number
ImproX OSCAR	ImproX OSCAR Door Control Unit	IBT930-0-0-GB-XX

Table 9 – ImproX Units Compatible with the IXP300, IXP400 or IXP400i Systems

Other IXP300 AND IXP400-compatible units are under development.

Remote Reader and Antenna Reader Compatibility

Some ImproX units are designed to interface with several types of Remote and/or Antenna Readers. These are listed here.

Unit	Interfaces With
ImproX MfT	One Third-party device and two ImproX Antenna Readers or two ImproX Remote Readers or one Wiegand Reader and two ImproX Antenna Readers
ImproX iTRT	Two ImproX Remote Readers or two ImproX Receivers or two Third-party hardware devices or two Wiegand Readers
ImproX iTT	Two ImproX Antenna Readers
ImproX TA	One Remote Reader

Unit	Interfaces With
	or one Receiver or one third-party hardware device or one Wiegand Reader
ImproX DBv 125 kHz	One ImproX Antenna Reader
ImproX DBv 13.56 MHz	One ImproX Remote Reader or one ImproX Receiver or one Third-party hardware device or one Wiegand Reader

Table 10 – Remote Reader and Antenna Reader Compatibility

System Size Limits

This list provides details of a maximum system using **ImproX IC**, **ImproX AC**, **ImproX EC** or **ImproX EC^{II}** Controllers.

*If a Site uses a combination of Controllers, it is limited by the **lowest** Controller's parameters. Only the number of transaction types that each Controller can buffer is independent.*

For Systems with preinstalled ImproX EC's or IC's, on addition of the EC^{II} ensure the Systems configured for NO cross-controller communications (including Interleading Zone Routing).

Item (see Note 6)	**ImproX IC Controller IXP300**	**ImproX EC Controller IXP400** (see Note 5)	**ImproX EC^{II} Controller IXP400i** (see Note 5)
Total Number of **Tags**	Up to 8 000	Up to 160 000	Up to 300 000
Total Buffered Transactions	9 000 (see Note 1)	Up to 500 000 (see Note 2)	Up to 1 000 000 (see Note 2)
Sites per System	255	255	255
Hosts per Site	1	1	1
Controllers per Site	16	64	64
Terminal Fixed Addresses per Controller	48 (see Note 3)	64 (see Note 3)	64 (see Note 3)
Terminal Fixed Addresses per Location	3 (see Note 3)	3 (see Note 3)	3 (see Note 3)
Locations per Zone	16	64	64
Zones per Controller	16	64	64
Actions Supported	10 000	10 000	50 000
Locations per Controller	16	64 (see Note 4)	64 (see Note 4)
Tags per Person	4	4	8
Tagholder Access Groups	256	1 024	10 000
Operating Voltage	10 V DC - 30 V DC	10 V DC - 30 V DC	10 V DC - 30 V DC
Controller Communications Baud Rate	38 400	38 400	38 400

Table 11 – System Configuration Parameters

Item (see Note 6)	**ImproX IC Controller IXP300**	**ImproX EC Controller IXP400** (see Note 5)	**ImproX EC^{II} Controller IXP400i** (see Note 5)
Terminal Communications Baud Rate	38 400	38 400	38 400
Digital Inputs (not used for Access Control)	4	None	None
Onboard Relays	2	None	None
Elevator Control	6 (see Note 7)	6 (see Note 7)	15 (see Note 8)

SysConfigParameters.jpg

Table 12 – System Configuration Parameters (continued)

Note 1—Up to 9 000 buffered transactions in the Controller Transaction Buffer at one time.

Note 2—This amount is relative to the number of Tags in the ImproNet Database, and the number of memory modules in the Controller.

Note 3—A Terminal with two Fixed Addresses, such as the ImproX iTT, is treated as two separate Terminals. In the same way, a Terminal with 3 Fixed Addresses (that is the ImproX MfT), is treated as three Terminals by the Software.

Note 4—In Anti-passback (APB) Mode, two Terminals per Location are required. Therefore, if all locations are in Anti-passback (APB) Mode, the limit is 64 Locations per ImproX EC—assuming all Terminals have a single Fixed Address.

*Note 5—The **ImproX EC^{II} Controller** generally has the same features as the ImproX EC Controller. However, the ImproX EC^{II} does support more advanced functionality not supported in the EC.*

Note 6—All figures provided are the maximum. In some cases interdependence between parameters; that is the maximum number of Zones per Controller depends on how many Terminals are used per Location.

Note 7—When using IXP300 or IXP400, we recommend a maximum of 6 Lifts (Elevators). This enables one Access Group per Tag for normal access control requirements. A maximum of 80 floors per Lift (Elevator) is supported.

Note 8—When using IXP400i, we recommend a maximum of 15 Lifts (Elevators). A maximum of 80 floors per Lift (Elevator) is supported.

Installation Information

Doors and Zones

Each Location supports up to three Fixed Addresses.

The ImproX IC Controller supports a maximum of 48 Terminal Fixed Addresses. However, if each Location uses 3 Terminals, the ImproX IC Controller can only support 16 Locations.

The ImproX EC and EC^{II} support a maximum of 64 Terminal Fixed Addresses. However, if each Location uses 3 Terminals, the Controller can only support 21 Locations.

Anti-passback (APB) Mode requires two Readers at each Location at which Anti-passback (APB) is required. Each Location can have its own Zone, or a number of Locations can be grouped together to form an Anti-passback (APB) Zone. Anti-passback (APB) Zones are set-up during configuration of an IXP300, IXP400 or IXP400i System.

Addressing Scheme

Each ImproX Controller and Terminal has two types of addresses: A **Logical Address** and a **Fixed Address**. The following process is performed when the **Auto-ID** function in the ImproNet Engine Software is run:

1. The Engine polls all Controllers.
2. The Controllers poll their Terminals to request their unique Fixed Addresses.
3. The ImproNet Software assigns a unique Logical Address to each detected Controller and Terminal.

Logical Addresses

A Logical Address is a unique, hexadecimal address assigned by ImproNet Engine to each Controller and Terminal in a System. Logical Addresses are used to identify hardware units and are stored in each unit's non-volatile memory. The process of assigning Logical Addresses to all units (called Auto-ID) is required on initial System start-up, or when adding additional units, or when replacing units.

Hardware cannot be configured until it is physically connected to the PC via the serial port (when ImproX HI is used) or to the USB port (if an ImproX RH is used). Data cannot be entered until the hardware units have been identified and assigned Addresses using the Auto-ID process in the Engine.

Fixed Addresses

*Each ImproX iTT, ImproX TA and ImproX iTRT has **two Fixed Addresses**. Therefore, ImproNet operates each unit as two separate Terminals.*

A Fixed Address is a unique address allocated to each ImproX unit during manufacture. All ImproX Terminals are programmed with an eight-digit unique Address.

ImproX iTT and ImproX MfT
The ImproX iTT and ImproX MfT (Firmware V7.18 or above) operate under the following rules:

- If you have no Antenna Readers connected to the Terminal, the Terminal reveals both Fixed Addresses. This is because the Terminal is most likely being used for non-tag-reading applications.
- If only Antenna Reader 1 is connected to the Terminal, it only reveals Antenna Reader 1's Fixed Address.
- If you connected both Antenna Readers, the Terminal reveals both Fixed Addresses.
- If you connected only Antenna Reader 2, the Terminal reveals both Fixed Addresses.

So, if you're only using one Antenna Reader, then use Antenna Reader 1. The Terminal reveals only one Fixed Address. In all other arrangements the Terminal reveals two Fixed Addresses.

You may override this Firmware feature on a site by using ImproNet Engine. This is however complex, and not recommended. Please contact the Support Department if you wish to do this.

Recording Installation Information

It is very important that installation information is always kept up to date, *that details of changes are recorded, and that Unit Location Charts are identified and dated clearly to avoid confusion of old and new information. Old sheets can be stored separately so that a record of changes is maintained for reference. The same care must be taken with System cabling diagrams.*

This following procedure is required by ImproNet Software Operators when they configure the System.

*The **Unit Location Chart** is included with all ImproX Controllers. An adhesive **label** displaying the unit's Fixed Address is included with every unit—stick this label onto the **Unit Location Chart.***

When you install ImproX Controllers, Terminals or Remote Readers, you **must** record the following information on the **Unit Location Chart**:

- The unit's name

Consistent naming of units and their locations is important. Use this description during configuration when naming units in the Graphic User Interface (GUI).

- The unit's Fixed Address(es) (record the Fixed Address **before** attaching a unit to its mounting surface).
- The unit's direction—Entry or Exit
- The unit type
- An accurate description of the unit's location

Positioning Units

Information on the Unit Location Chart(s) must correspond with the cable layout diagram(s) or Site Plan(s) drawn up for the Site. This enables you to trace units and find faults.

Attach each unit to the wall or other mounting surface as stated in its individual Installation Manual. All covers must be attached and in place at all times once installation is complete.

Fit Arc Suppression Circuitry to all unit relay outputs at Locations where the units drive Strike Locks or Magnetic Locks. 25 Vrms, 500 A, 77 V max clamping ***Metal Oxide Varistors*** *can be used. Guidelines are provided in the individual Hardware Installation Manuals.*

The configuration shown in Figure 14 does not support inter-controller communications.

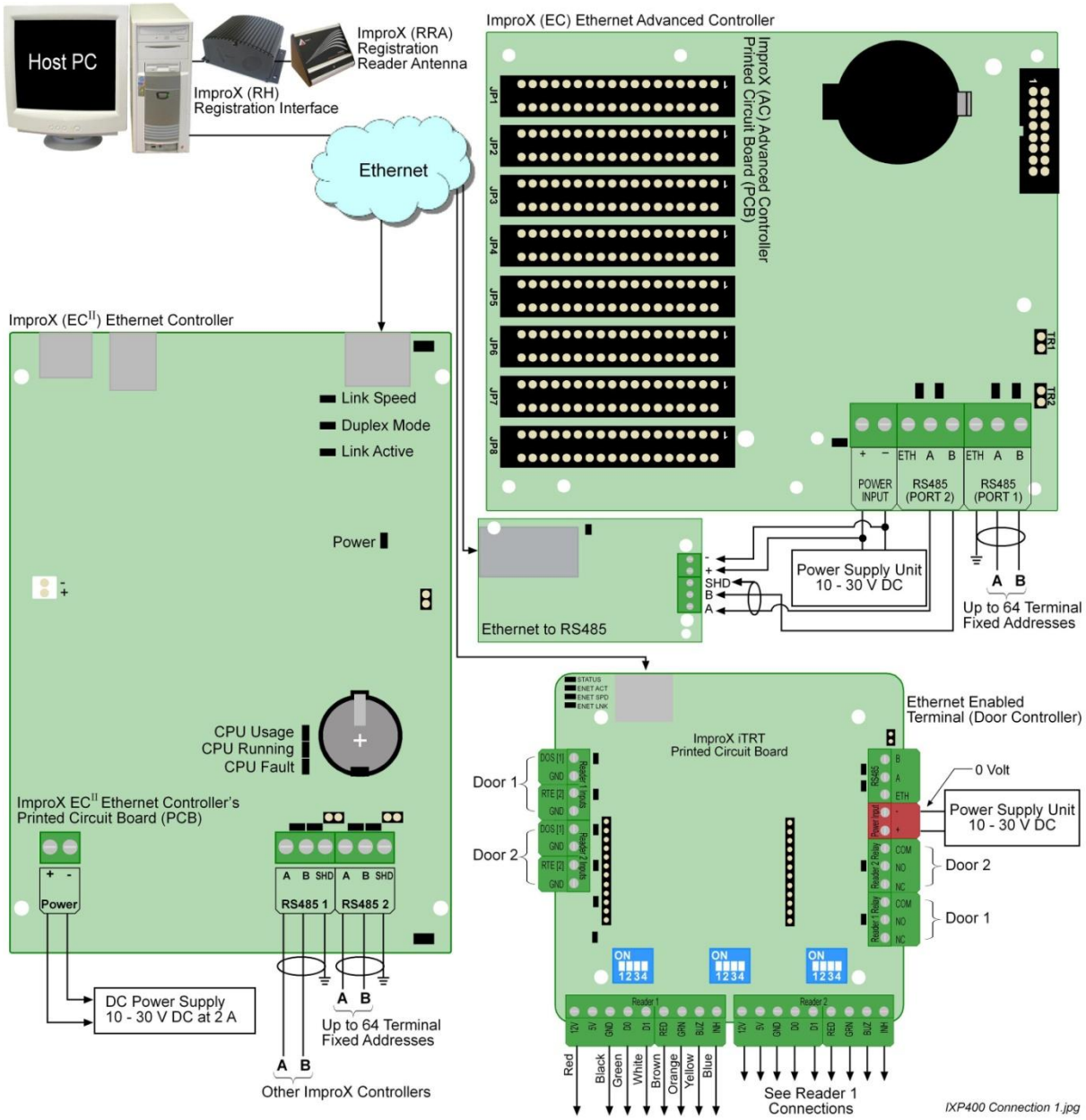

Figure 14 – IXP400 Interconnection Diagram 1

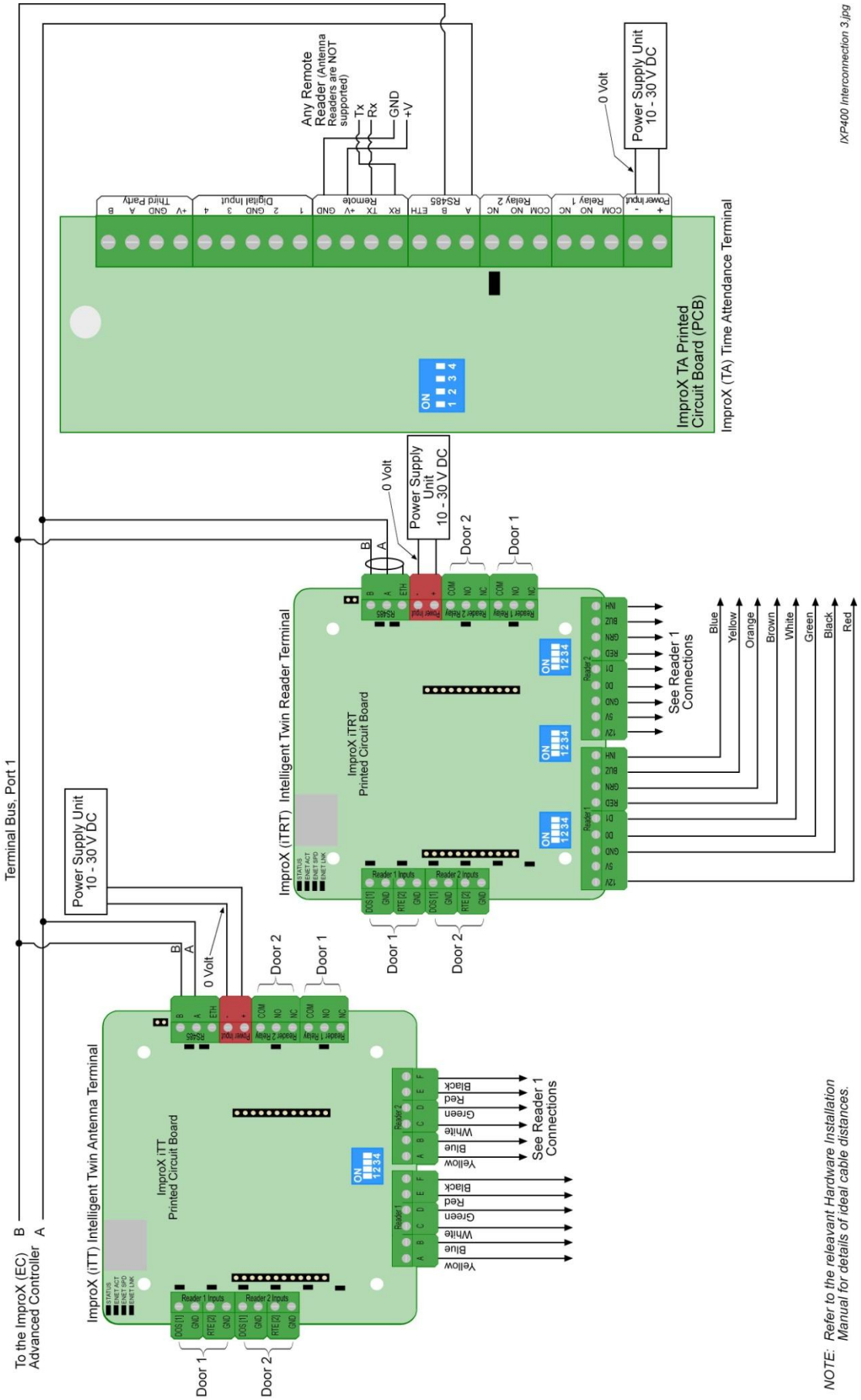

Figure 15 – IXP400 Interconnection Diagram 2

Hardware Maintenance

Maintenance Overview

Periodic hardware maintenance ensures that units run efficiently and that problems requiring attention are noted.

Impro Technologies does not support on-site repairs. Should an ImproX unit fail, return it to your local Impro Distributor. They will repair or replace the unit.

Maintenance Tools

Hardware Tools

Do not use water, detergents, or other chemicals when cleaning inside an ImproX unit.

- **Cleaning Unit Housings**—wipe unit housings with a damp, lint-free cloth. Do not use detergents or solvents.
- **Cleaning Inside the Unit**—use a high-pressure air hose to clean *inside* ImproX units.

Software Tools

Ethernet Configuration Utility
Use the **Ethernet Configuration Utility** to find ImproX EC Controllers on the network and assign Controller IP Addresses. To open the Ethernet Configuration Utility, proceed as follows:

In Windows®, click **Start**>**Programs**>**ImproNet**>**Utils**>**Ethernet Configuration Utility**.

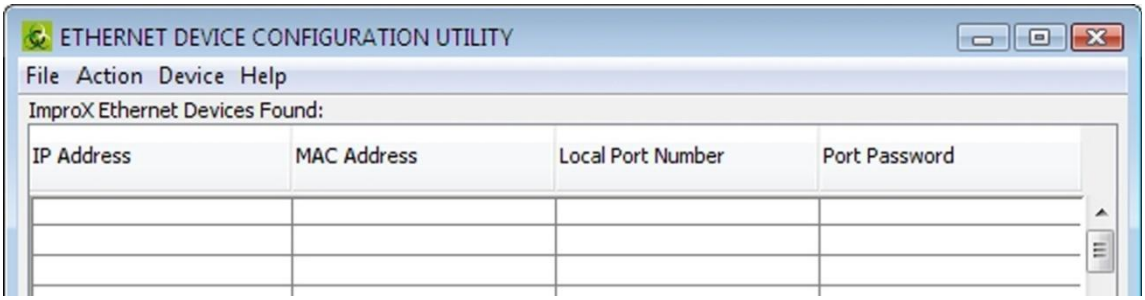

Figure 16 – Ethernet Configuration Utility

Ethernet Discovery Utility
Use the **Ethernet Discovery Utility** to find ImproX EC^{II} Controllers on the network and assign Controller IP Addresses. To open the Ethernet Discovery Utility, proceed as follows:

In Windows®, click **Start**>**Programs**>**ImproNet**>**Utils**>**Ethernet Discovery Utility**.

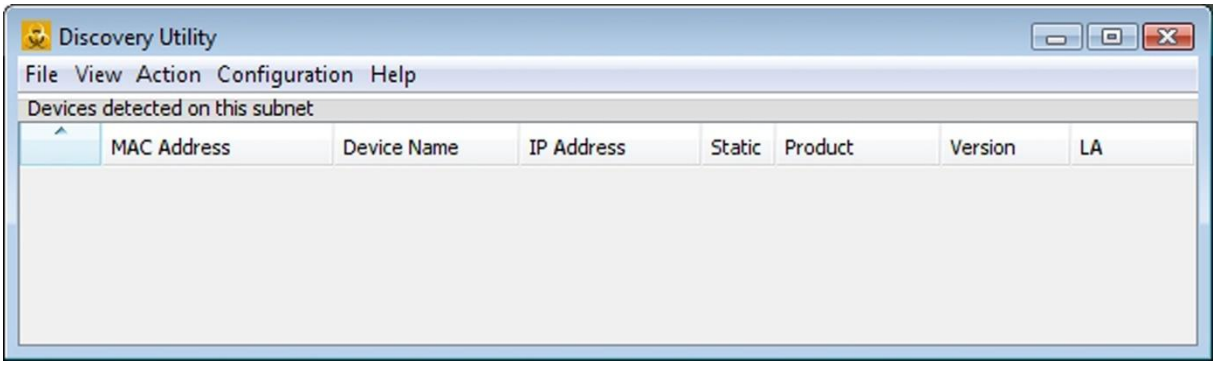

Figure 17 – Ethernet Discovery Utility

Firmware Upgrade Utility

The **Firmware Upgrade Utility** offers the following maintenance and fault-detection options:

- **Ping Test**—indicates the installed ImproX hardware communicating on the communications busses. The Ping Test detects the communications interface, Controllers and Terminals. Refer to the **Firmware Upgrade** information in Part 8 of this manual for more information.
- **Comms Test**—determines the quality of communications on the Controller (Host) communications bus (Port 2), and Terminal communications bus (Port 1). To prevent potential communications errors, tested units should return a pass of 100 %. A pass rate less than 100 % indicates potential problems with the hardware or communications media.

Performing a Comms Test

*Perform a Ping Test **BEFORE** you run a Comms Test. (See the section Hardware Testing on page 42).*

1. Start the Firmware Upgrade Utility from **Start**>**Programs**>**ImproNet**>**Utils**>**Firmware Upgrade**.
2. Select the **System Tools** tab (as shown in Figure 18).

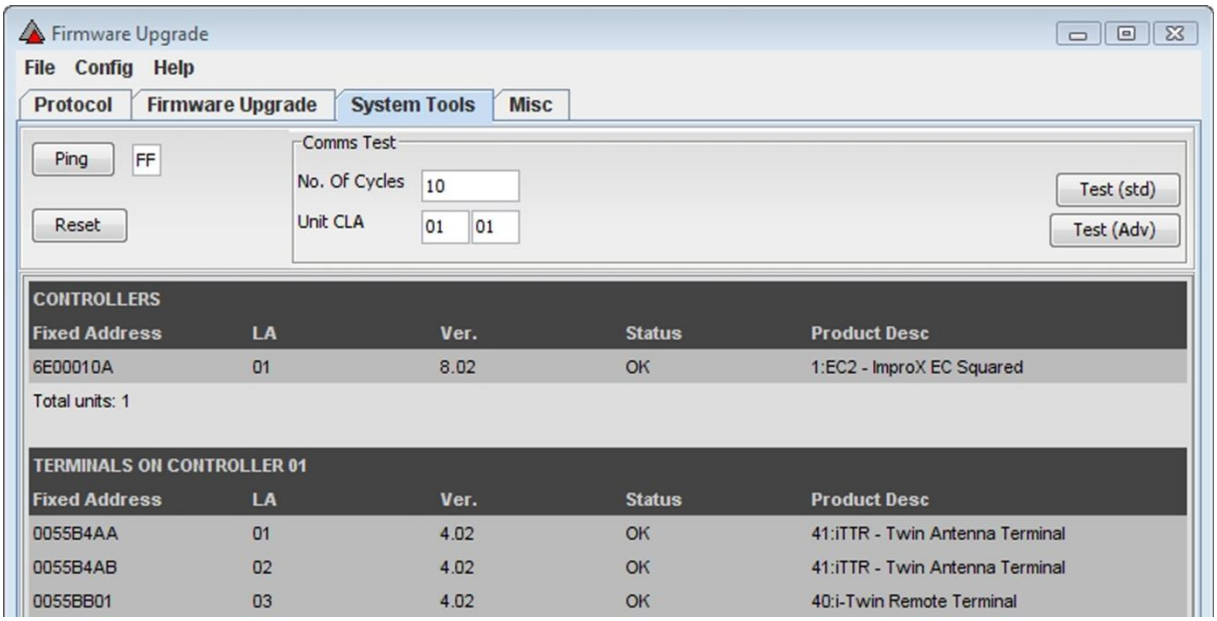

Figure 18 – Firmware Upgrade (System Tools)

- The **No. of Cycles** field specifies the number of times that the Comms Test cycles through sending and receiving data packets from units.
- The **Test (std)** button displays the Comms Test window in a simple format.
- The **Test (Adv)** button displays the Comms Test window in a detailed grid format.

Hardware Testing

Communications

- **Ping Test**—used to test whether a connection between units or the Host PC is present. Details are provided for each unit in the Specific Maintenance section below.
- **Onboard diagnostic LEDs**—units display communication status via onboard LEDs. This is useful if you are working on the unit or do not have access to the Host PC.

Tag Reading

Test the read range of a Reader by presenting a Tag from a distance and moving it closer to the Reader. When the Tag is read, the Reader beeps or flashes its LED depending on its features and settings (these parameters can be set up during Access software configuration – refer to Part 3 of this manual for more information).

Buzzer

Units with Buzzers make a *beep* sound on presentation of a Tag. However, the Buzzer must have previously been enabled via the ImproNet Access Software Application.

LEDs

Some ImproX hardware devices have onboard LEDs that indicate the communication, input, and relays status. LEDs are useful in-field diagnostic tools when the Host PC is unavailable or distant from the unit. Various diagnostic options are discussed later in Part 1.

Specific Maintenance

ImproX RH

- **Ping Test**—use the **Firmware Upgrade Utility** to run a Ping Test. Ensure that the unit responds.
- **Comms Test**—use the **Firmware Upgrade Utility** to run a Comms Test. This ensures that communication between the unit and Host PC is present.
- Diagnostic LEDs:
  - **USB LED** illuminates when ImproNet Engine is polling
  - **RS485 LED** illuminates when communication is established between the Controller and the ImproX RH.
- **POST Test**—on power-up, the Controller automatically runs a **Power-on Self-test (POST)**. During this test, the diagnostic LEDs indicate the unit's status.

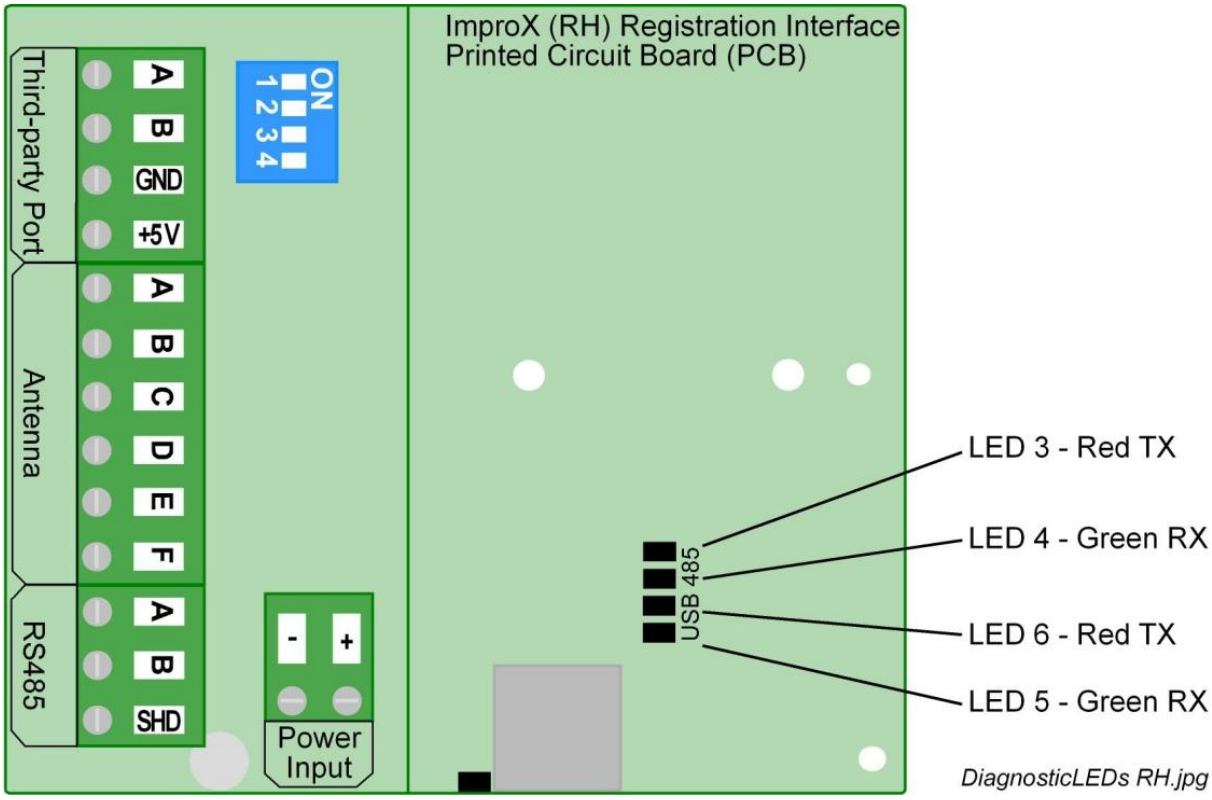

Figure 19 – ImproX RH Diagnostic LEDs

ImproX RRA or ImproX RRM

- **Tag Reading Test**
  - place a Tag on the unit
  - In ImproNet Access, create a new Tagholder
  - Select Read Tag (The Tag's number displays in the Tag **Code** textbox)
- **POST Test**—on power-up, the Reader automatically runs a **Power-on Self-test (POST)**. During this test, the LED changes from Red to Green and the Buzzer beeps when a Tag is read.

ImproX IC

- **Ping Test**—use the **Firmware Upgrade Utility** to run a Ping Test. Ensure that the Controller responds.
- **Comms Test**—use the **Firmware Upgrade Utility** to run a Comms Test. This ensures that communication between the Controller and Host PC is present.
- **Onboard LEDs**—provide real-time indication of communication status for Port 1 (Terminal) and Port 2 (Controller) communications busses. When you have configured the attached Terminals in ImproNet Access, LEDs 2, 3, 4, and 5 are permanently on.
  - **LEDs 2** and **3** indicate that the Controller is sending and receiving information from its Terminals. Intermittently flashing LEDs indicate potential communication problems; probable causes are bad wiring, induced noise on the communications bus, or faulty Terminals on the communications bus.

  - **LEDs 4** and **5** indicate the Controller communications bus state. If both LEDs are on, there is good communication between the ImproX HI and the ImproX RH. The LEDs are off if the ImproX HI or RH is off-line.

- **Power LED**—remove power from the unit. Reconnect power to the unit – the power LED illuminates when sufficient voltage is available.

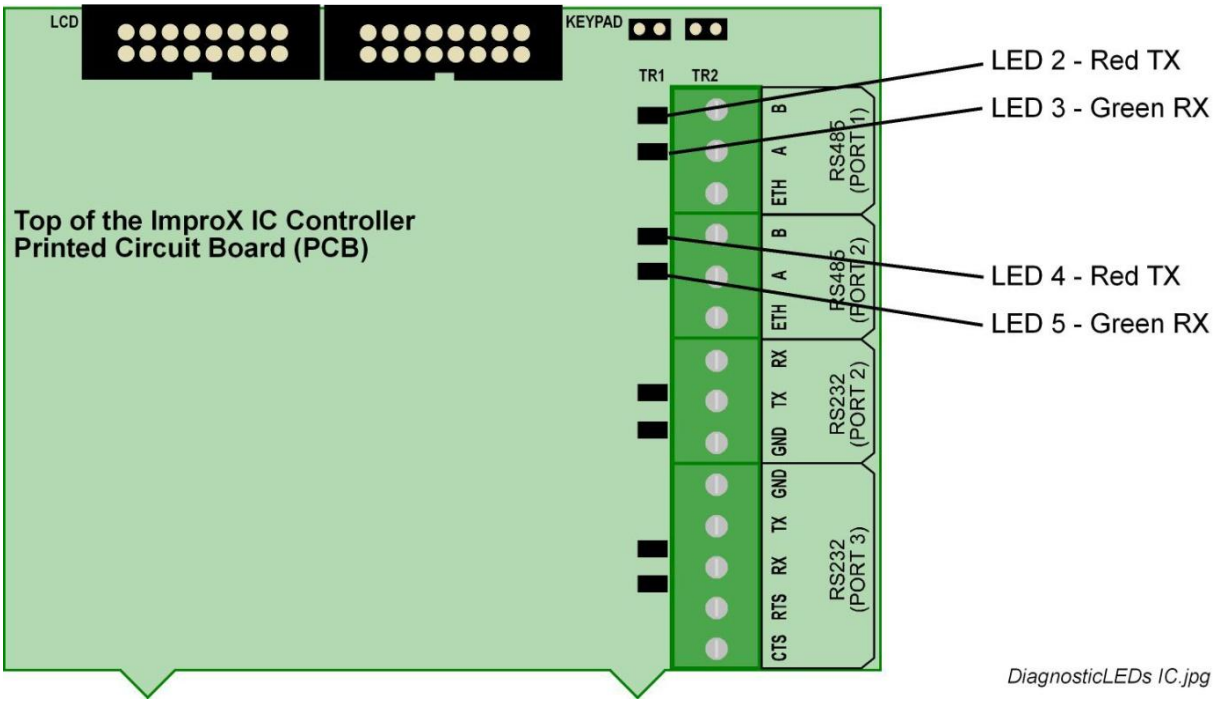

Figure 20 – ImproX IC Diagnostic LEDs

ImproX EC

- **Assign IP Addresses**—use the **Ethernet Configuration Utility** to find ImproX EC Controllers on the network and assign the Controllers IP Addresses.

- **Ping Test**—use the **Firmware Upgrade Utility** to run a Ping Test. Ensure that the Controller responds.

- **Comms Test**—use the **Firmware Upgrade Utility** to run a Comms Test. This ensures that communication between the Controller and Host PC is present.

- **Onboard LEDs**—provide real-time indication of communication status for Port 1 (Terminal) and Port 2 (Host) communications busses. When you have configured the attached Terminals in ImproNet Access, LEDs 1, 2, 3, and 4 will be permanently on.
  - **LEDs 1** and **2** indicate that the Controller is sending and receiving information from its Terminals via the **Terminal Bus**. Intermittently flashing LEDs indicate potential communication problems; probable causes are faulty wiring, induced noise on the Terminal Bus, or faulty Terminals on the Terminal Bus.
  - **LEDs 3** and **4** indicate the Controller communications bus state. If both LEDs are on, there is good communication between the Controller and the ImproNet System. The LEDs will be off if the ImproX EC is off-line.

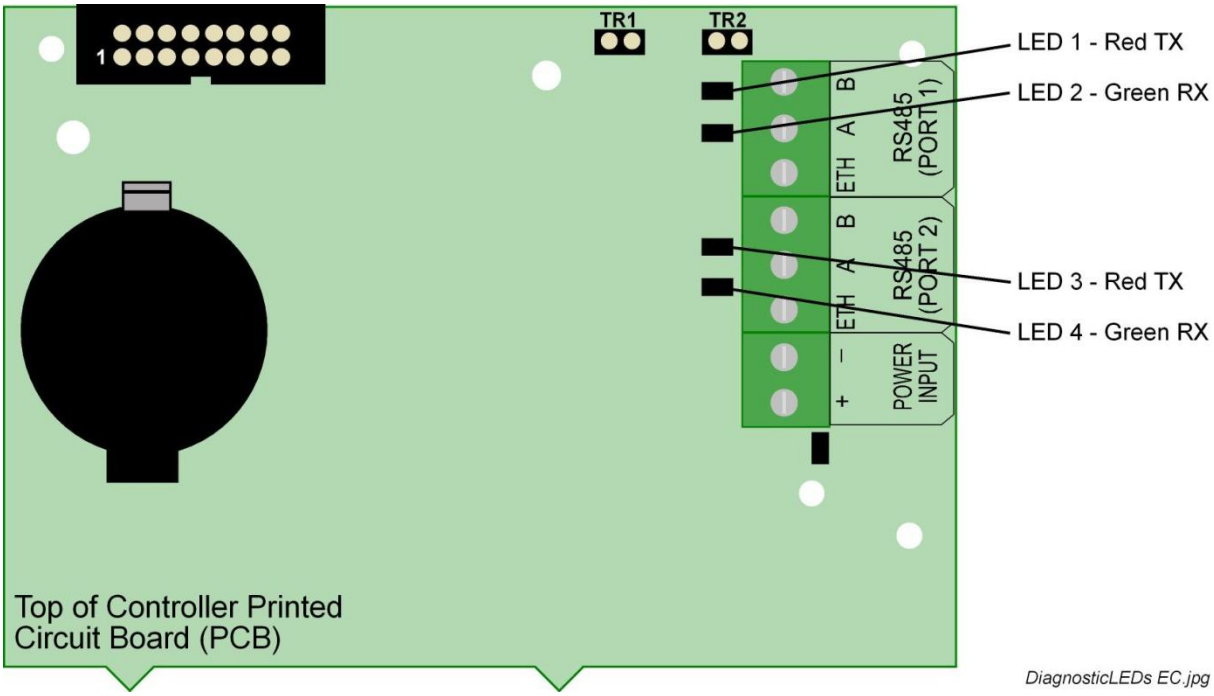

Figure 21 – ImproX EC Diagnostic LEDs

ImproX EC^{II}

- **Assign IP Addresses**—use the **Ethernet Discovery Utility** to find ImproX EC^{II} Controllers on the network and assign the Controllers IP Addresses.
- **Ping Test**—use the **Firmware Upgrade Utility** to run a Ping Test. Ensure that the Controller responds.
- **Comms Test**—use the **Firmware Upgrade Utility** to run a Comms Test. This ensures that communication between the Controller and Host PC is present.
- **Onboard TCP/IP LEDs 1**, **2** and **3**—provide a real-time indication of Link Speed, Duplex Mode and Link Active status of the Controller.
- **Onboard Power LED 4**—indicates whether power has been applied to the Controller.
- **Onboard CPU Diagnostic LEDs**—provide a real-time indication of the status of the CPU
  - **CPU Usage LED 5** indicates when ON that the CPU is idle, and when OFF that the CPU is busy.
  - **CPU Running LED 6** indicates when ON that the CPU is running, and when OFF that the CPU is not running.
  - **CPU Fault LED 7** indicates when ON that a fault condition exists with the CPU, and when OFF that the CPU is OK.
- **Onboard RS485 LEDs**—provide real-time indication of communication status for RS485 1 (Controller) and RS485 2 (Terminal) communications busses. When you have configured the attached Terminals in ImproNet Access, LEDs 14, 15, 16 and 17 remain permanently on.
  - **RS485 (1) LEDs 8** and **9** indicate the Controller Comms Bus state. If both LEDs are on, there is good communication between the Controller and the ImproNet System. The LEDs are off if the ImproX EC^{II} is off-line.

– **RS485 (2) LEDs 10** and **11** indicate that the Controller is sending and receiving information from its Terminals via the **Terminal Bus**. Intermittent flashing of LEDs 16 and 17 indicate potential communication problems; probable causes are faulty wiring, induced noise on the Terminal Bus, or faulty Terminals on the Terminal Bus.

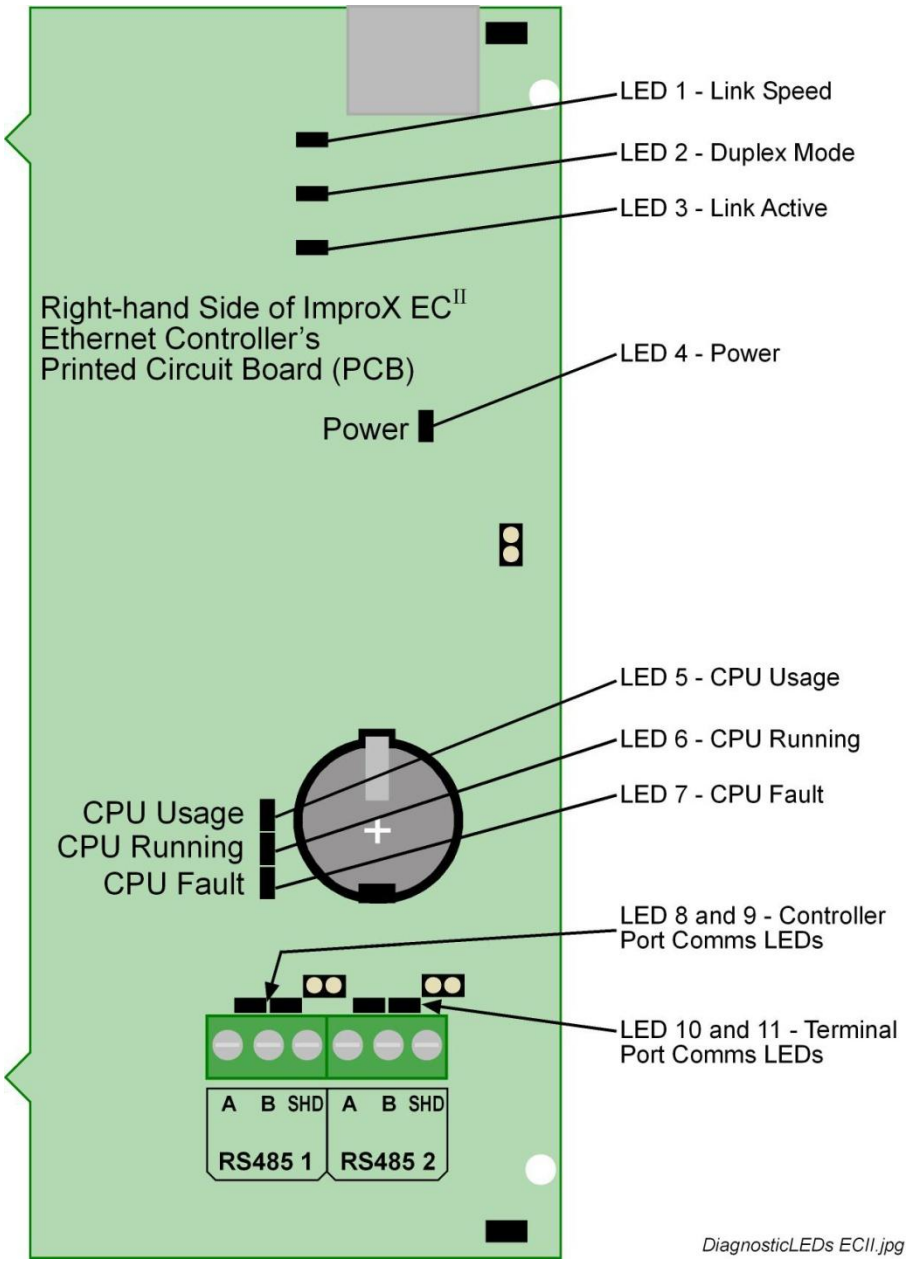

Figure 22 – ImproX EC^{II} Diagnostic LEDs

ImproX MfT

- **Ping Test**—use the **Firmware Upgrade Utility** to run a Ping Test. Ensure that the Terminal responds.
- **Comms Test**—use the **Firmware Upgrade Utility** to run a Comms Test. This ensures that communication between the Terminal and Controller is present.

- **POST Test**—on power-up, the Terminal automatically runs a **Power-on Self-test (POST)**. Power-on Self-test (POST) tests the RAM and Flash Checksums, and the Read/Write Circuitry. The results of the Power-on Self-test (POST) are available as diagnostic information from the Controller or PC.
  - If a parameter fails, the Antenna Reader emits a continuous beep for 2 seconds.
  - When the Power-on Self-test (POST) is complete, the Terminal emits two short beeps.
- **Onboard Diagnostic LEDs**—these indicate the status of:
  - RS485 Rx and Tx
- **Test Mode**—tests Readers attached to ImproX MfT. This mode indicates when a Tag is in range and being read by the Antenna Reader.

To access Test Mode:

3. Remove the RS485 communications cable from the ImproX MfT.
4. Wait for approximately 10 seconds until the Red LED on the Antenna Reader attached to the ImproX MfT flashes intermittently.
5. Present a Tag to the Antenna Reader.
6. When the Tag is read the LED changes to solid RED and the Buzzer emits a continuous, long beep while the Tag is in range.

Use this procedure to verify that an Antenna Reader is reading a Tag, or to determine the Tag reading range.

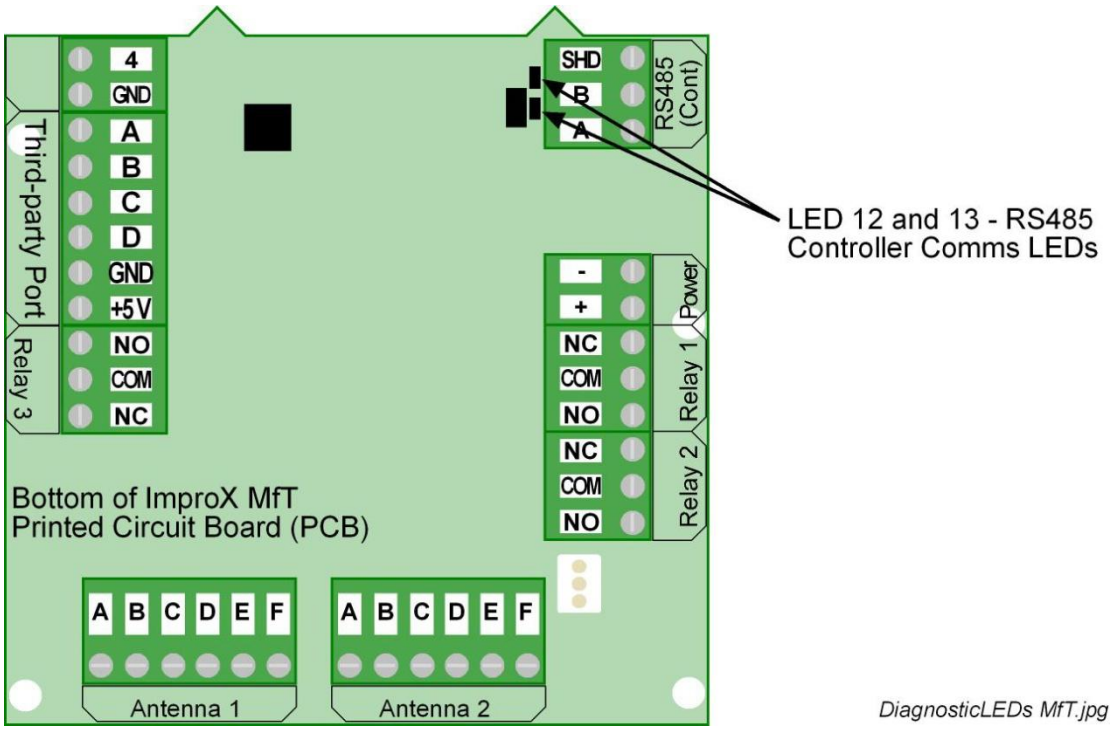

Figure 23 – ImproX MfT Diagnostic LEDs

ImproX iTT

- **Ping Test**—use the **Firmware Upgrade Utility** to run a Ping Test. Ensure that the Terminal responds.

- **Comms Test**—use the **Firmware Upgrade Utility** to run a Comms Test. This ensures that communication between the Terminal and Controller is present.
- **POST Test**—on power-up, the Terminal automatically runs a **Power-on Self-test (POST)**. Power-on Self-test (POST) tests the RAM and Flash Checksums, and the Read/Write Circuitry. The results of the Power-on Self-test (POST) are available as diagnostic information from the Controller or PC.
  - If a parameter fails, the Antenna Reader emits a continuous beep for 2 seconds.
  - When the Power-on Self-test (POST) is complete, the Terminal emits two short beeps.
- **Onboard Diagnostic LEDs**—these indicate the status of:
  - Ethernet Communications
  - RS485 Rx and Tx
  - Reader 1 and 2, Input 1 and 2
  - Relay 1 and 2
- **Test Mode**—Tests Readers attached to ImproX iTT. This mode indicates when a Tag is in range and being read by the Antenna Reader.

To access Test Mode:

1. Remove the RS485 communications cable from the ImproX iTT.
2. Wait for approximately 10 seconds until the Red LED on the Antenna Reader attached to the ImproX iTT flashes intermittently.
3. Present a Tag to the Antenna Reader.
4. When the Tag is read the LED changes to solid RED and the Buzzer emits a continuous, long beep while the Tag is in range.

Use this procedure to verify an Antenna Reader is reading a Tag, or to determine the Tag reading range.

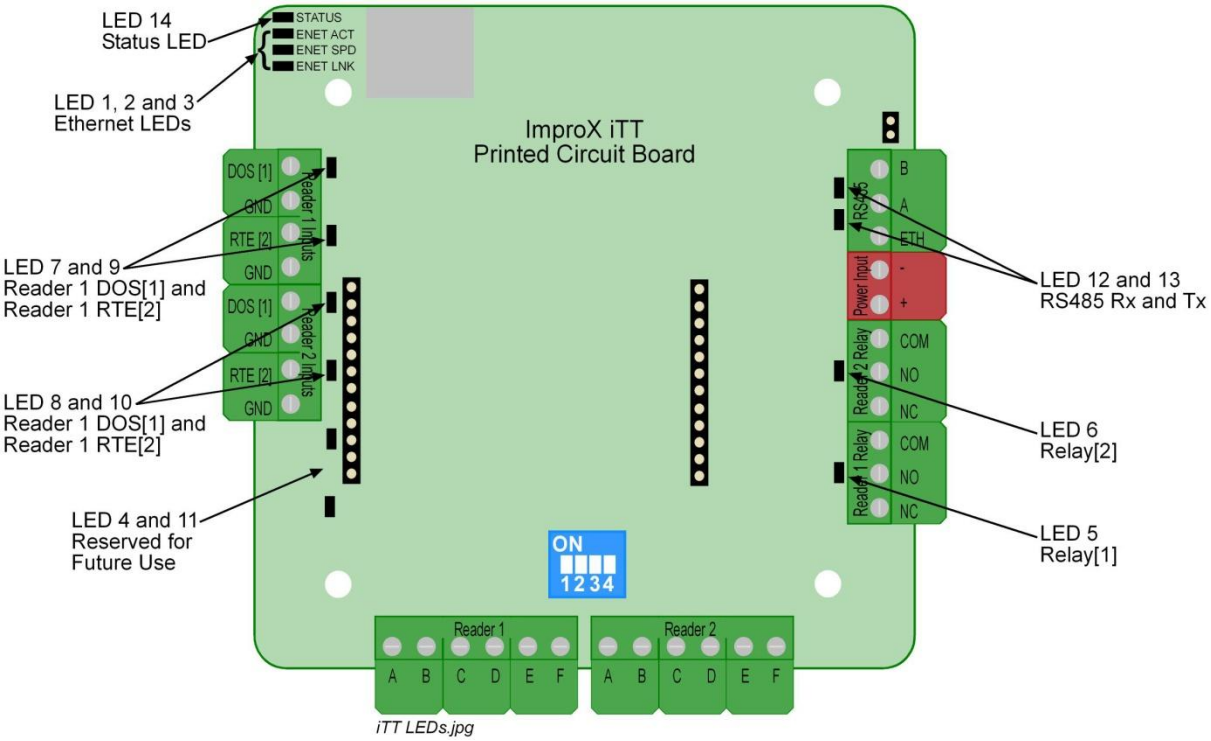

Figure 24 – ImproX iTT Diagnostic LEDs

ImproX iTRT

- **Ping Test**—use the **Firmware Upgrade Utility** to run a Ping Test. Ensure that the Terminal responds.
- **Comms Test**—use the **Firmware Upgrade Utility** to run a Comms Test. This ensures that communication between the Terminal and Controller is present.
- **POST Test**—on power-up, the Terminal automatically runs a **Power-on Self-test (POST)**. Power-on Self-test (POST) tests the RAM and Flash Checksums, and the Read/Write Circuitry. The results of the Power-on Self-test (POST) are available as diagnostic information from the Controller or PC.
  - If a parameter fails, the Reader emits a continuous beep for 2 seconds.
  - When the Power-on Self-test (POST) is complete, the Terminal emits two short beeps.
- **Onboard Diagnostic LEDs**—these indicate the status of:
  - Ethernet Communications
  - RS485 Rx and Tx
  - Reader 1 and 2, Input 1 and 2
  - Relay 1 and 2
- **Test Mode**—Tests Readers attached to ImproX iTRT. This mode indicates when a Tag is in range and being read by the Reader.

To access Test Mode:

1. Remove the communications cable from the ImproX iTRT.
2. Wait for approximately 10 seconds until the Red LED on the Reader attached to the ImproX iTRT flashes intermittently.
3. Present a Tag to the Reader.
4. When the Tag is read the LED changes to solid RED and the Buzzer emits a continuous, long beep while the Tag is in range.

Use this procedure to verify a Reader is reading a Tag, or to determine the Tag reading range.

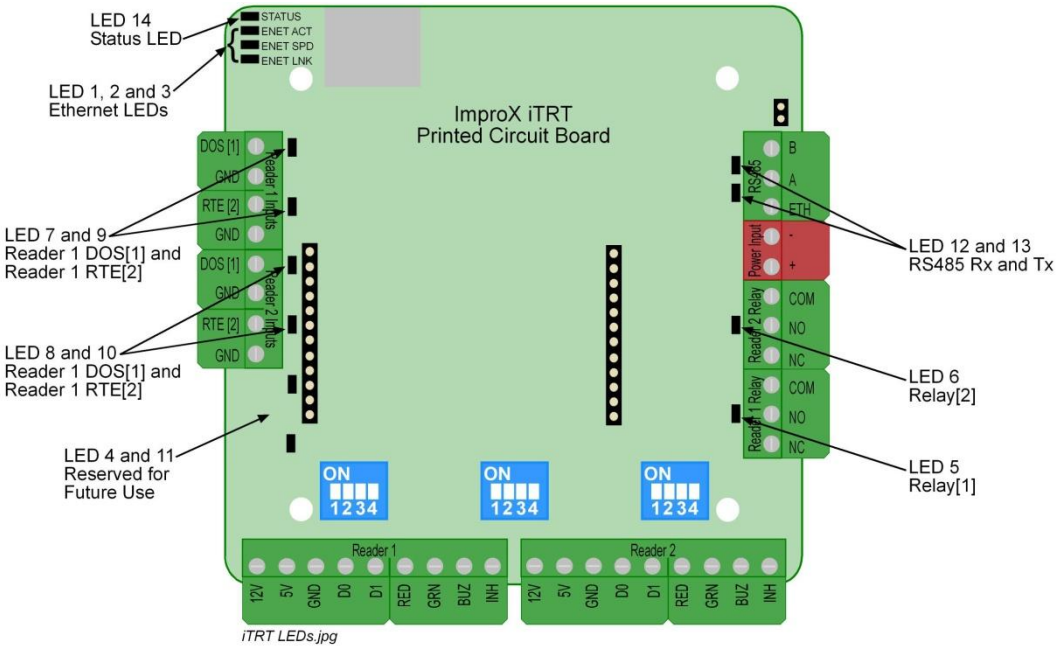

Figure 25 – ImproX iTRT Diagnostic LEDs

ImproX MDTA Multi-discipline Time Attendance Terminal

- **Ping Test**—use the **Firmware Upgrade Utility** to run a Ping Test. Ensure that the Terminal responds.
- **Comms Test**—use the **Firmware Upgrade Utility** to run a Comms Test. This ensures that communication between the Terminal and Controller is present.
- **POST Test**—on power-up, the Terminal automatically runs a **Power-on Self-test (POST)**. Power-on Self-test (POST) tests the RAM and Flash Checksums, and the Read/Write Circuitry. The results of the Power-on Self-test (POST) are available as diagnostic information from the Controller or PC.
  - If a parameter fails, the Terminal emits a continuous beep for 2 seconds.
  - When the Power-on Self-test (POST) is complete, the Terminal emits two short beeps.

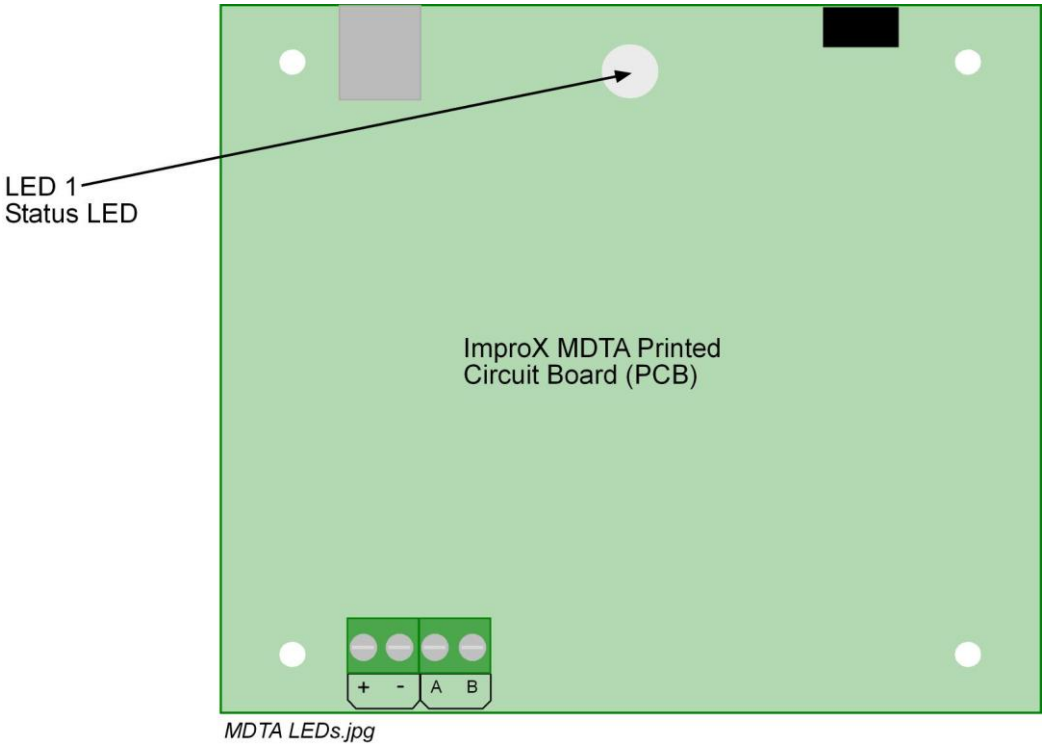

Figure 26 – ImproX MDTA LEDs

ImproX DBv 125 kHz Variant

- **Ping Test**—use the **Firmware Upgrade Utility** to run a Ping Test. Ensure that the Terminal responds.
- **Comms Test**—use the **Firmware Upgrade Utility** to run a Comms Test. This ensures that communication between the Terminal and Controller is present.
- **POST Test**—on power-up, the Terminal automatically runs a **Power-on Self-test (POST)**. Power-on Self-test (POST) tests the RAM and Flash Checksums, and the Read/Write Circuitry. The results of the Power-on Self-test (POST) are available as diagnostic information from the Controller or PC.
  - If a parameter fails, the Antenna Reader emits a continuous beep for 2 seconds.
  - When the Power-on Self-test (POST) is complete, the Terminal emits two short beeps.

- **Onboard Diagnostic LEDs**—these indicate the status of:
  - RS485 Rx and Tx
  - Reader 1 and 2, Input 1 and 2
  - Relay 1 and 2
- **Test Mode**—tests Readers attached to ImproX DBv. This mode indicates when a Tag is in range and being read by the Antenna Reader.

To access Test Mode:

1. Remove the RS485 communications cable from the ImproX DBv.
2. Wait for approximately 10 seconds until the Red LED on the Antenna Reader attached to the ImproX DBv flashes intermittently.
3. Present a Tag to the Antenna Reader.
4. When the Tag is read the LED changes to solid RED and the Buzzer emits a continuous, long beep while the Tag is in range.

Use this procedure to verify that an Antenna Reader is reading a Tag, or to determine the Tag reading range.

ImproX DBv 13.56 MHz Variant

- **Ping Test**—use the **Firmware Upgrade Utility** to run a Ping Test. Ensure that the Terminal responds.
- **Comms Test**—use the **Firmware Upgrade Utility** to run a Comms Test. This ensures that communication between the Terminal and Controller is present.
- **POST Test**—on power-up, the Terminal automatically runs a **Power-on Self-test (POST)**. Power-on Self-test (POST) tests the RAM and Flash Checksums, and the Read/Write Circuitry. The results of the Power-on Self-test (POST) are available as diagnostic information from the Controller or PC.
  - If a parameter fails, the Reader emits a continuous beep for 2 seconds.
  - When the Power-on Self-test (POST) is complete, the Terminal emits two short beeps.
- **Onboard Diagnostic LEDs**—these indicate the status of:
  - RS485 Rx and Tx
  - Reader 1 and 2, Input 1 and 2
  - Relay 1 and 2
- **Test Mode**—tests Readers attached to ImproX DBv. This mode indicates when a Tag is in range and being read by the Reader.

To access Test Mode:

1. Remove the RS485 communications cable from the ImproX DBv.
2. Wait for approximately 10 seconds until the Red LED on the Reader attached to the ImproX DBv flashes intermittently.
3. Present a Tag to the Reader.
4. When the Tag is read the LED changes to solid RED and the Buzzer emits a continuous, long beep while the Tag is in range.

Use this procedure to verify that a Reader is reading a Tag, or to determine the Tag reading range.

ImproX O16

- **Ping Test**—use the **Firmware Upgrade Utility** to run a Ping Test. Ensure that the Terminal responds.
- **Comms Test**—use the **Firmware Upgrade Utility** to run a Comms Test. This ensures that communication between the Terminal and Controller is present.
- **Status LEDs**—Terminal bus comms is correct if the Green LED and the Red LED on the Terminal are flashing. The Rx and Tx LEDs are continuously on when the Terminal is communicating correctly. If they flash intermittently, there are communication problems. The Relay LEDs indicate when the processor has sent a command for a particular relay to activate.

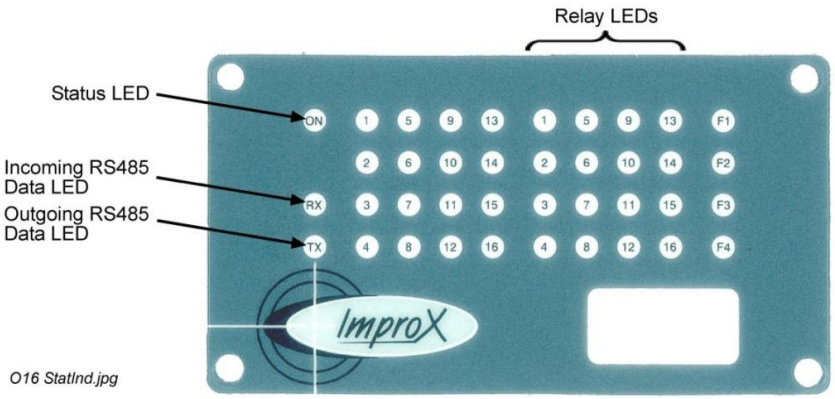

Figure 27 – Position of the Status Indicators on the Front End Plate

ImproX I16

- **Ping Test**—use the **Firmware Upgrade Utility** to run a Ping Test. Ensure that the Terminal responds.
- **Comms Test**—use the **Firmware Upgrade Utility** to run a Comms Test. This ensures that communication between the Terminal and Controller is present.
- **Status LEDs**—Terminal bus comms is correct if the Green LED and the Red LED on the Terminal are flashing. The Rx and Tx LEDs are continuously on when the Terminal is communicating correctly. If they flash intermittently, there are communication problems. The Relay LEDs indicate when the processor has sent a command for a particular relay to activate.

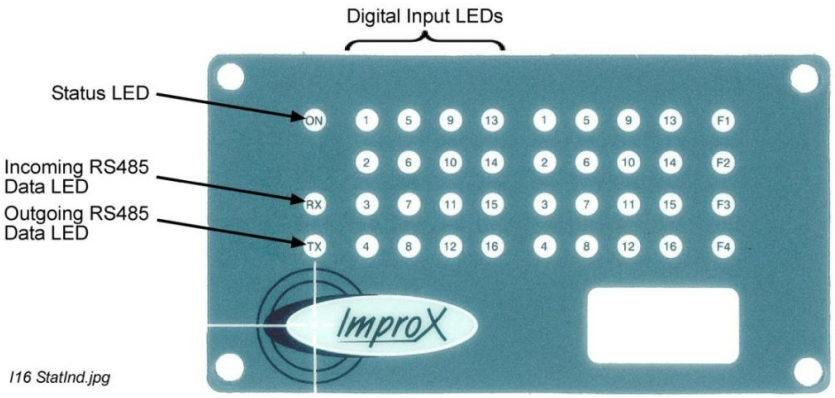

Figure 28 – Position of the Status Indicators on the Front End Plate

ImproX ER

- **Ping Test**—use the **Firmware Upgrade Utility** to run a Ping Test. Ensure that the Terminal responds.
- **Comms Test**—use the **Firmware Upgrade Utility** to run a Comms Test. This ensures that communication between the Terminal and Controller is present.
- **Test Mode**—testing Readers attached to ImproX ER. This mode indicates when a Tag is in range and being read by the Reader.

To access Test Mode:
1. Remove the RS485 communications cable from the ImproX ER.
2. Wait for approximately 10 seconds until the ImproX ER's RED status LED flashes intermittently.
3. Present a Tag to the Antenna.
4. When a Tag is read the Status LED changes to solid Green and the Buzzer emits a long, continuous beep while the Tag is in range.

Use this procedure to verify that an Antenna is reading a Tag, or to determine the Tag reading range.

ImproX LR

- **Ping Test**—Use the **Firmware Upgrade Utility** to run a Ping Test. Ensure that the Terminal responds.
- **Comms Test**—Use the **Firmware Upgrade Utility** to run a Comms Test. This ensures that communication between the Terminal and Controller is present.
- **Test Mode**—Testing Readers attached to ImproX LR. This mode indicates when a Tag is in range and being read by the Reader.

To access Test Mode:
1. Remove the RS485 communications cable from the ImproX LR.
2. Wait for approximately 10 seconds until the ImproX LR's RED status LED flashes intermittently.
3. Present a Tag to the Antenna.
4. When a Tag is read the Status LED changes to solid Green and the Buzzer emits a long, continuous beep while the Tag is in range.

Use this procedure to verify that an Antenna is reading a Tag, or to determine the Tag reading range.

ImproX B-SHO Fingerprint Terminal

- **Ping Test**—use the **Firmware Upgrade Utility** to run a Ping Test. Ensure that the Terminal responds.
- **Comms Test**—use the **Firmware Upgrade Utility** to run a Comms Test. This ensures that communication between the Terminal and Controller is present.

- **POST Test**—on power-up, the Terminal automatically runs a **Power-on Self-test (POST)**. Power-on Self-test (POST) tests the RAM, Flash Checksums, and the Fingerprint Scanner Circuitry.
  - If a parameter fails, the Terminal emits a continuous beep for 2 seconds.
  - When the Power-on Self-test (POST) is complete, the Terminal emits two short beeps.

ImproX MMA Antenna Reader

- **Tag Reading Test**—Present a Tag to the Antenna Reader by moving in from a distance. The status LED illuminates when the Tag is read. Ensure that the read distance is adequate.
- **LED Test**—Using ImproNet Access, set the Antenna Reader's LED state to **Red strobe Green**, and then to **Green strobe Red**. Ensure that the LED flashes Red and Green for both settings.

ImproX Remote Readers

ImproX Remote Readers are dependent on their host Terminal. Therefore, refer to the appropriate ImproX Terminal maintenance information for details.

Wiegand Readers

Wiegand Readers are dependent on their host Terminal. Therefore, refer to the appropriate ImproX Terminal maintenance information for details.

USER NOTES